Harvard

Lighting products, **enlightening** solutions

1993 - 2013

Designed and manufactured in the UK

CL CoolLED LED Drivers

CoolLED

CL Analogue

Up to 33W

270mA, 350mA, 450mA, 500mA, 600mA 700mA, 900mA, 1000mA, 1200mA & 1400mA

CoolLED drivers provide a high performance solution for powering high-brightness LEDs from a mains supply

Analogue Dimming Control

Linear dimming from conventional 1-10V dimmer Can also be programmed with a fixed or variable resistor, refer to graph below to calculate required resistor for desired current

Regulated Output Current

LED series string is supplied with electronically regulated constant current.

High Efficiency and Long Life

High efficiency design ensures cool operation and long life

Active Power Factor Correction Reduces mains current and lowers electricity cost.

Self Protected

Open and short-circuit protected, self-resetting over temperature trip

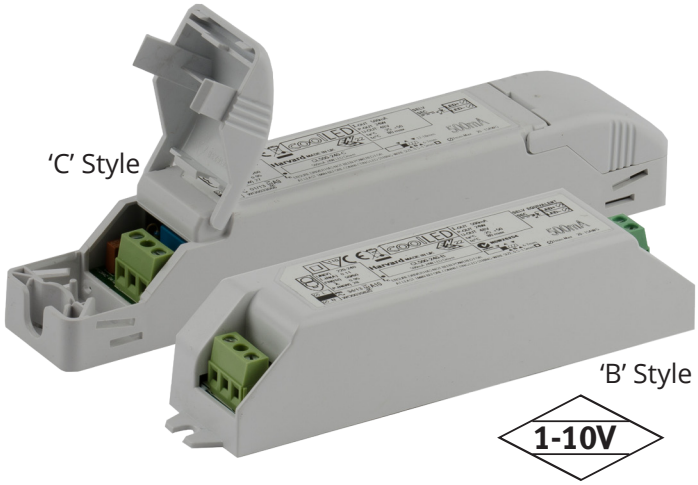

Key Facts

- 220 - 240V
- Fully-isolated, SELV output delivering up to 33W of power
- High power factor (0.98)
- Constant current output
- Self resetting thermal trip
- 86% efficiency
- Surge protection up to 4kV
- Linear dimming from 5% to 100%
- Double insulated (Class II)
- Integral and remote versions
- Hot Plug Protected
- Cable clamps for fast assembly ('C' type only)
- A/B Style conformally coated

Wiring diagram

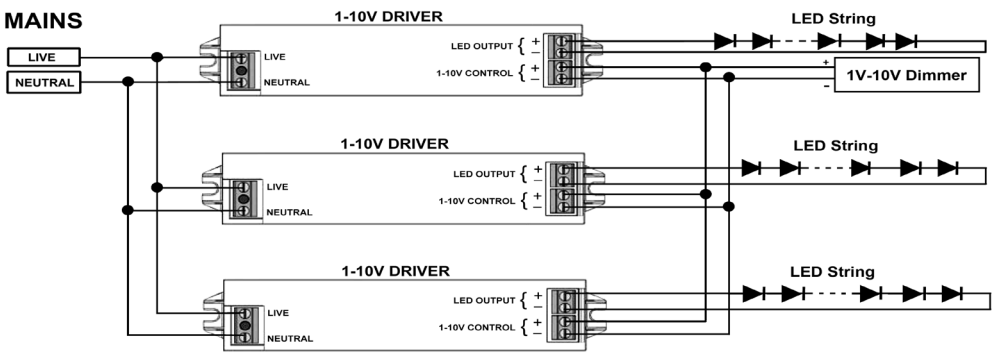

IMPORTANT
Disconnect the mains supply for at least one minute before connecting or disconnecting the LED string.

*All information is subject to change at our discretion

** For custom variants please consult a sales representative

www.HarvardEng.com
Harvard Engineering Ltd, Tyler Close, Normanton, Wakefield, WF6 1RL, UK
Tel: +44 (0)113 383 1000 Fax: +44(0)113 383 1010

Technical specification

Mains input voltage	220 to 240V ac rms
Mains frequency	47 - 63Hz
Mains surge protection	4kV common-mode 2kV differential
Input-output isolation	3kV ac rms
Humidity	95% max non-condensing
Thermal trip	110°C - internal self-resetting
Ambient temperature range	-25˚C to 50˚C
Maximum Tc temperature	80˚C
Dimming range	5% - 100%
Terminal blocks	Rising clamp 10mm input pitch, 5mm output pitch
Enclosure	White polycarbonate UL94-V0 rated
Wire size	0.5mm to 1.5mm^2

Variants

Part number	Current	LED String Voltage	Output power range	Power factor at full load	Efficiency at full load	Off Load Voltage
CL270A-240-B/C	270mA (±5%)	12V to 58V (9.2V fully dimmed)	3.24 - 15w	0.94	83%	<60V
CL350A-240-A/B/C	350mA (±5%)	10.8V to 48V (8V fully dimmed)	3.78 - 17w	0.95	84%	<50V
CL450A-240-B/C	450mA (±5%)	10.8V to 48V (8V fully dimmed)	4.86 - 22w	0.97	85%	<50V
CL500A-240-A/B/C/AB	500mA (±5%)	10.8V to 48V (8V fully dimmed)	5.4 - 24w	0.98	85%	<50V
CL600A-240-A/B/C	600mA (±5%)	10.8V to 48V (8V fully dimmed)	6.48 - 29w	0.98	86%	<50V
CL700A-240-A/B/C/AB	700mA (±5%)	10.8V to 48V (8V fully dimmed)	7.56 - 33w	0.98	87%	<50V
CL900A-240-B/C	900mA (±5%)	10.8V to 36.7V (8V fully dimmed)	9.72 - 33w	0.98	86%	<39V
CL1000A-240-A/B/C/AB	1000mA (±5%)	10.8V to 33V (8V fully dimmed)	10.8 - 33w	0.98	86%	<36V
CL1200A-240-A/B/C	1200mA (±5%)	10.8V to 23.5V (8.5V fully dimmed)	12.96 - 28w	0.98	84%	<26V
CL1400A-240-A/B/C	1400mA (±5%)	10.8V to 18.5V (8.5V fully dimmed)	15.12 - 26w	0.98	83%	<21V

*All information is subject to change at our discretion

** For custom variants please consult a sales representative

Dimensions

A Style

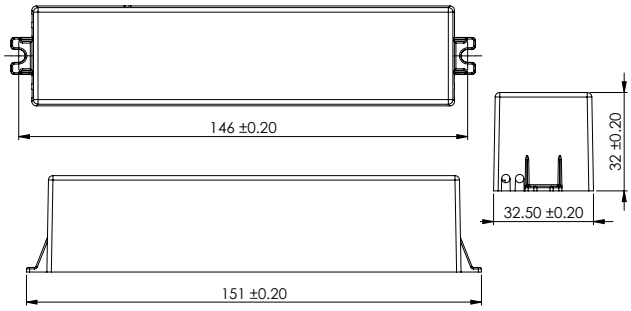

A/B Style

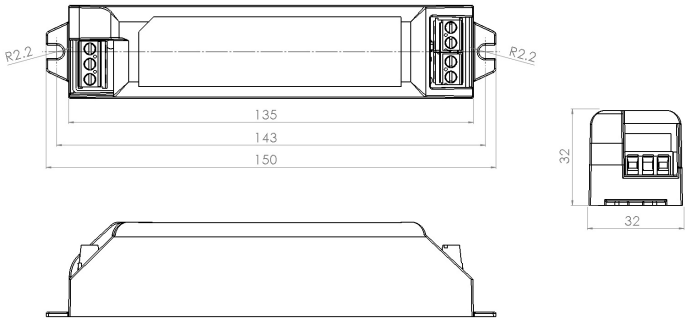

B Style

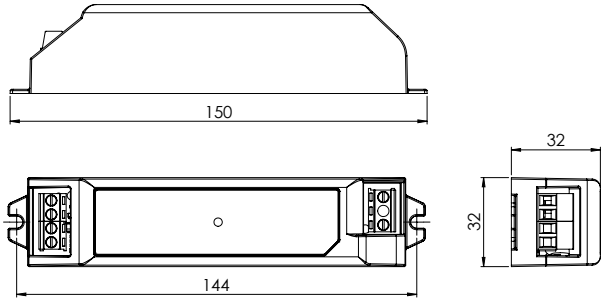

C Style

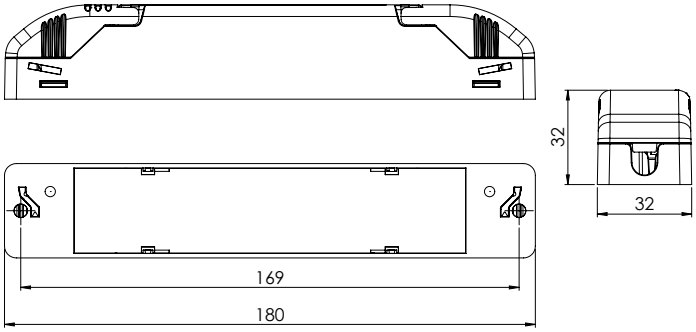

Case Style	Dimensions	Weight	Box Quantity
A - Flying leads	151mm x 32.5mm x 32mm	132g or 260g (potted)	50
A/B - Hybrid	150mm x 32mm x 32mm	126g	50
B - Integral	150mm x 32mm x 32mm	115g	50
C - Cable clamps	180mm x 32mm x 32mm	130g	50

Tolerance: + or - 0.3mm

Compliance

Approval	Standards
ENEC	EN 61347-2-13, EN 61000-3-2, EN 61000-3-3, EN 62384, EN 60929, EN 61547 & EN 55015

*All information is subject to change at our discretion

** For custom variants please consult a sales representative

Resistor programming

Dimming Information

Electronic Dimmer Connection

The electronic dimmer must be capable of 'sinking' the total current from all drivers. For example, a dimmer with 30mA sink capability will control 100 drivers.

1-10V Dimming Control Port

A voltage between 0V and 1V on this terminal gives minimum light output (5% of maximum current)
A voltage of 10V (or open circuit connection) gives maximum light output. Between 1V and 10V terminal voltage, the light output is infinitely variable.

The negative terminal of the 1-10V and LED negative are not isolated from each other, this means that the insulation class of the external 1-10V controller may affect the ground isolation and SELV rating of the LED output.

To maintain SELV isolation of the driver output the 1-10V dimming controller and network should have reinforced or double insulation from the mains supply.
The 1-10V dimming method is described in EN60929

*All information is subject to change at our discretion

** For custom variants please consult a sales representative