MULTIVERT® 400A

Size 2, 690VAC

IEC FUSE SWITCH DISCONNECTORS

NH VERTICAL FUSE SWITCH DISCONNECTOR

MULTIVERT® NH vertical fuse switch disconnectors meet all functions of NH fuse switch disconnectors. They are designed for installation on to bus bars in triple pole arrangements.

MULTIVERT® 400A are for installation on to 185mm bus bar systems.

MULTIVERT® 400A are designed for NH fuse-links in accordance with IEC/EN 60269-2, VDE 0636-2, size 2: 400A.

The system is a modular system, that allows the installation of individual components. MULTIVERT® offer the user the possibility of fast and easy installation as well as a high degree of protection during installation and maintenance.

TECHNICAL DATA OVERVIEW

Voltage AC	690 VAC
Amper (A)	400 A
Size per Standard	2
SCCR	Ue = AC 400 V; Ie = 400 A 120kA Ue = AC 500 V; Ie = 400 A 120kA Ue = AC 690 V; Ie = 315 A 120kA Ue = AC 690 V; Ie = 400 A 100kA
Mounting	bus bar system 185 mm
Switchability	1 x triple pole, 3 x single pole
Number of Poles	3

FEATURES & BENEFITS

- Installation on to 185 mm bus bar system
  Standard design with M 12 screws: M = 35 ±3Nm
  Direct installation without drilling with hooked clamps
- Symmetrical switch - top/bottom cable terminal connection
- Touch protection IP 30 with central cover
- Varieties of cable termination: bolt, insert nut, V-terminal
- Integrated measuring transformer (optional) with unchanged installation depth
- Safe on load connection/disconnection in accordance with IEC 60947-3

APPLICATIONS

- Feeder pillars
- Transformer substations
- Switch boards for industrial applications
- Residential and industrial distribution units
- Cable distribution cabinets

STANDARDS

- IEC/EN 60 947-3
  For NH-fuse links size 2 in accordance with IEC/EN 60 269-2, VDE 0636-2

MERSEN reserves the right to change, update or correct, without notice, any information contained in this datasheet.

PRODUCT RANGE

1.200.000 1.220.000

MULTIVERT® 400 A size 2 185 mm 3 x single pole switching

Catalog number	Reference number	Cable termination components	Design	Weight kg [1]	Package
1.200.000	J1002187	3 M12 bolts	-	4.60	1 piece
1.210.000	Z1023200	3 M12 insert nuts	-	4.52	1 piece
1.220.000	A1023201	V-terminal for V-terminal clamps size 1,2,3	-	4.38	1 piece
1.220.900	B1023202	V-terminal, 2 terminals per phase for V-terminal clamps size 1,2,3	-	5.45	1 piece
1.200.100	Y1023199	3 M12 bolts	MULTIVERT® 1.200.000 with cabling of instrument leads for indication facilities	5.10	1 piece
1.200.084	E1023205	3 M12 bolts	MULTIVERT® 1.200.000 with integrated C.T. 400/5A, 3,75 VA, class 1 for single pole measurement (ready fitted in pole 1)	4.70	1 piece
1.200.064	C1023203	3 M12 bolts	MULTIVERT® 1.200.000 with integrated C.T. 400/5A, 3,75 VA, class 0,5; calibrated, for single pole measurement (ready fitted in pole 1)	-	1 piece
1.200.094	F1023206	3 M12 bolts	MULTIVERT® 1.200.000 with integrated C.T. 400/5A, 3,75 VA, class 1 for triple pole measurement	5.40	1 piece
1.200.074	D1023204	3 M12 bolts	MULTIVERT® 1.200.000 with integrated C.T. 400/5A, 3,75 VA, class 0,5; calibrated, for triple pole measurement	-	1 piece
1.230.000	T1023218	M12 bus bar terminal	MULTIVERT® with lateral bus bar terminals bus bar coupler switch cable terminal connection to right or left side possible	4.46	1 piece

[1] weight in kg per piece or set including package

MERSEN reserves the right to change, update or correct, without notice, any information contained in this datasheet.

PRODUCT RANGE

1.250.000 1.270.000

MULTIVERT® 400 A size 2 185 mm 1 x triple pole switching

Catalog number	Reference number	Cable termination components	Design	Weight kg [1]	Package
1.250.000	M1002190	3 M12 bolts	-	4.76	1 piece
1.260.000	G1023207	3 M12 insert nuts	-	4.68	1 piece
1.270.000	H1023208	V-terminal for V-terminal clamps size 1,2,3	-	4.78	1 piece
1.270.600	K1023210	V-terminal + 3 V-terminal clamps size 1,2,3	-	4.70	1 piece
1.270.900	L1023211	V-terminal, 2 terminals per phase for V-terminal clamps size 1,2,3	-	6.08	1 piece
1.250.100	X1002199	3 M12 bolts	MULTIVERT® 1.250.000 with cabling of instrument leads for indication facilities	5.20	1 piece
1.270.100	J1023209	V-terminal for V-terminal clamps size 1,2,3	MULTIVERT® 1.270.000 with cabling of instrument leads for indication facilities	5.10	1 piece
1.250.084	P1023214	3 M12 bolts	MULTIVERT® 1.250.000 with integrated C.T. 400/5A, 3,75 VA, class 1 for single pole measurement (ready fitted in pole 1)	4.90	1 piece
1.250.064	M1023212	3 M12 bolts	MULTIVERT® 1.250.000 with integrated C.T. 400/5A, 3,75 VA, class 0,5; calibrated, for single pole measurement (ready fitted in pole 1)	-	1 piece
1.250.094	Q1023215	3 M12 bolts	MULTIVERT® 1.250.000 with integrated C.T. 400/5A, 3,75 VA, class 1 for triple pole measurement	5.60	1 piece
1.250.074	N1023213	3 M12 bolts	MULTIVERT® 1.250.000 with integrated C.T. 400/5A, 3,75 VA, class 0,5; calibrated, for triple pole measurement	-	1 piece
1.270.094	S1023217	V-terminal for V-terminal clamps size 1,2,3	MULTIVERT® 1.270.000 with integrated C.T. 400/5A, 3,75 VA, class 1 for triple pole measurement	5.41	1 piece
1.270.074	R1023216	V-terminal for V-terminal clamps size 1,2,3	MULTIVERT® 1.270.000 with integrated C.T. 400/5A, 3,75 VA, class 0,5; calibrated, for triple pole measurement	-	1 piece
1.280.000	V1023219	M12 bus bar terminal	MULTIVERT® with lateral bus bar terminals bus bar coupler switch cable terminal connection to right or left side possible	4.53	1 piece

[1] weight in kg per piece or set including package

MERSEN reserves the right to change, update or correct, without notice, any information contained in this datasheet.

TECHNICAL DATA IN ACCORDANCE WITH EN / IEC 60947

	400 A 3 x single pole switching	**400 A 1 x triple pole switching**
Number of poles/phases	3	3
Size	2	2
Conventional free air thermal current with NH-fuse links I_{th}	400 A	400 A
Max. power dissipation of fuse links P_n	34 W	34 W
Conventional free air thermal current with solid links I_{th}	630 A	630 A
Max. power dissipation of solid links P_n	9 W	9 W
Utilization category to IEC/EN 60947-3 U_e = AC 400 V; I_e = 400 A U_e = AC 500 V; I_e = 400 A U_e = AC 690 V; I_e = 400 A	 AC 23 B AC 22 B AC 21 B	 AC 23 B AC 22 B AC 21 B
Rated operational voltage U_e	690 V	690 V
Rated insulation voltage U_i	1000 V	1000 V
Rated impulse withstand voltage U_{imp}	8 kV	8 kV
Rated frequency	50 ... 60 Hz	50 ... 60 Hz
Degree of protection	IP 30	IP 30
Degree of pollution	3	3
Rated duty	uninterrupted duty	uninterrupted duty
Rated conditional short-circuit current with fuse links U_e = AC 400 V; I_e = 400 A U_e = AC 500 V; I_e = 400 A U_e = AC 690 V; I_e = 315 A U_e = AC 690 V; I_e = 400 A	 120 kA 120 kA 120 kA 100 kA	 120 kA 120 kA 120 kA 100 kA
Rated short circuit making capacity with solid links I_{cm}	16 kAsw	16 kAsw
Rated short-time withstand current I_{cw}	8 kA / 1 s	8 kA / 1 s
Power dissipation by I_{th} without NH-fuse links	46 W	46 W
Power dissipation by I_{th} without solid links	126 W	126 W
Installation mode	bus bar installation	bus bar installation
Cable terminal connection		
Standard cable terminal	M12	M12
for cable lugs Cu max.	300 mm²	300 mm²
for cable lugs Al max.	300 mm²	300 mm²
for copper bars with max. dimensions	40 x 10 mm	40 x 10 mm
V-shaped lugs for V-terminal clamps	35 - 240 mm²	35 - 240 mm²
Bus bar terminal connection		
Standard bus bar terminal	M12	M12
Hooked clamp for bus bar with thickness	5 ... 10 mm	5 ... 10 mm
Bus bar system	185 mm	185 mm

MERSEN reserves the right to change, update or correct, without notice, any information contained in this datasheet.

DIMENSIONS

MULTIVERT® 250A, 400A, 630A NH-vertical fuse switch disconnector, 3 x single pole switching direct installation with screws on to 185mm bus bar system

(M01152b)

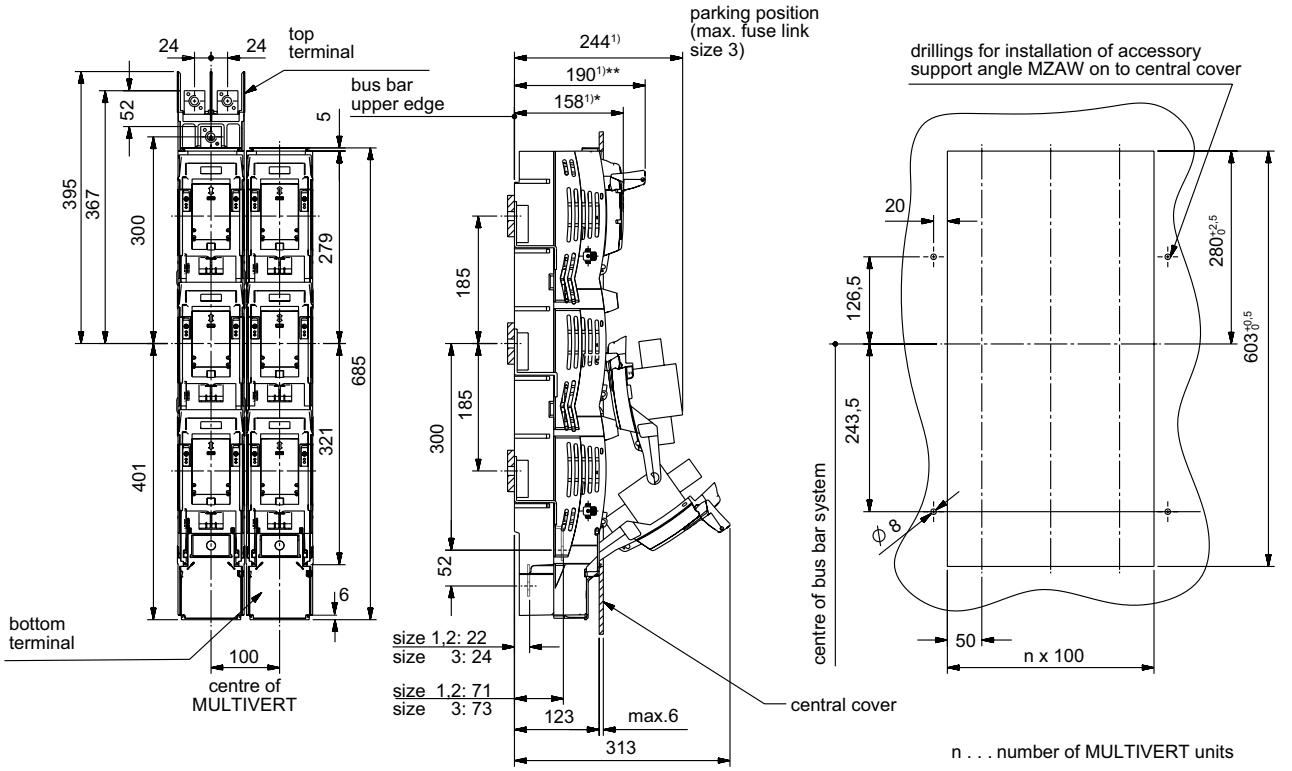

1) dimension from upper edge of bus bar

* 158 mm handle in closed position (folded) = total installation depth of MULTIVERT
** 190 mm handle in open position (fixed) = switching position

Dimensions in mm

MULTIVERT® 250A, 400A, 630A NH-vertical fuse switch disconnector, 1 x triple pole switching direct installation with screws on to 185mm bus bar system

(M01153b)

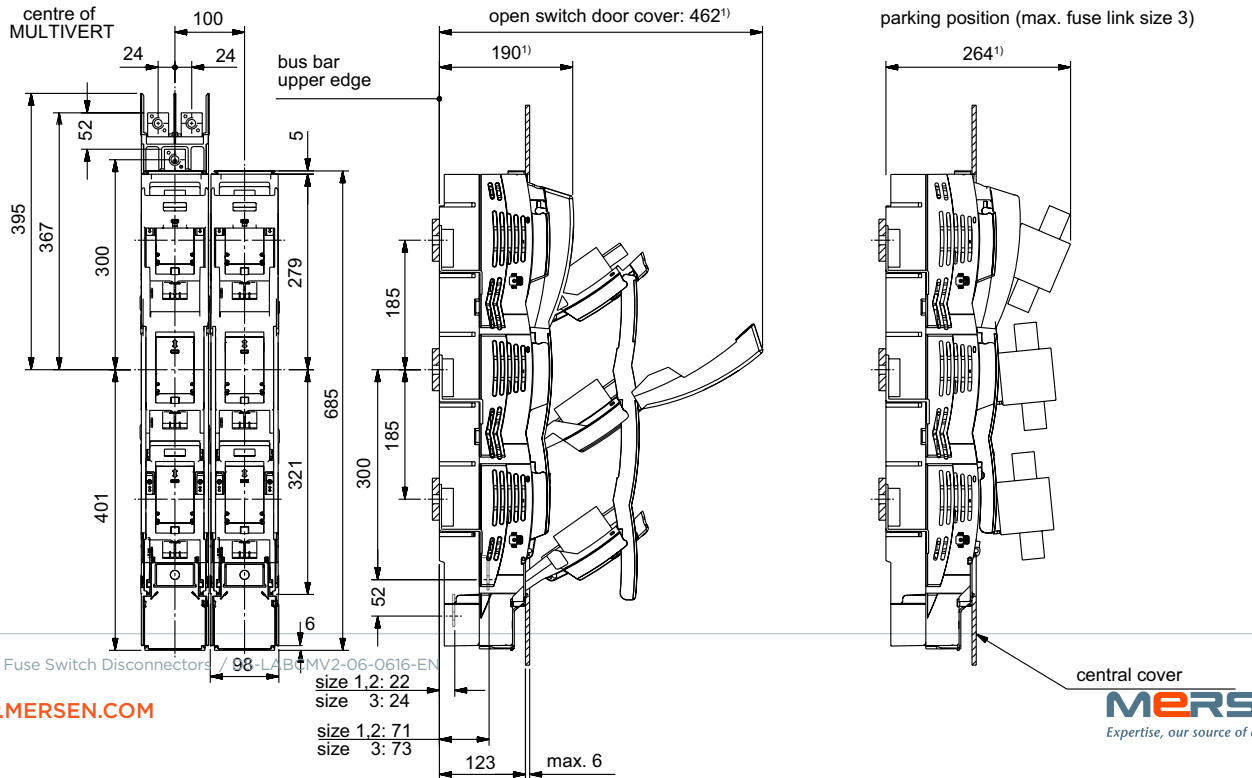

MERSEN reserves the right to change, update or correct, without notice, any information contained in this datasheet.

DIMENSIONS

MULTIVERT® 250A, 400A, 630A NH-vertical fuse switch disconnector, 3 x single pole switching direct installation without drilling with hooked clamps on to 185mm bus bar system (M01154b)

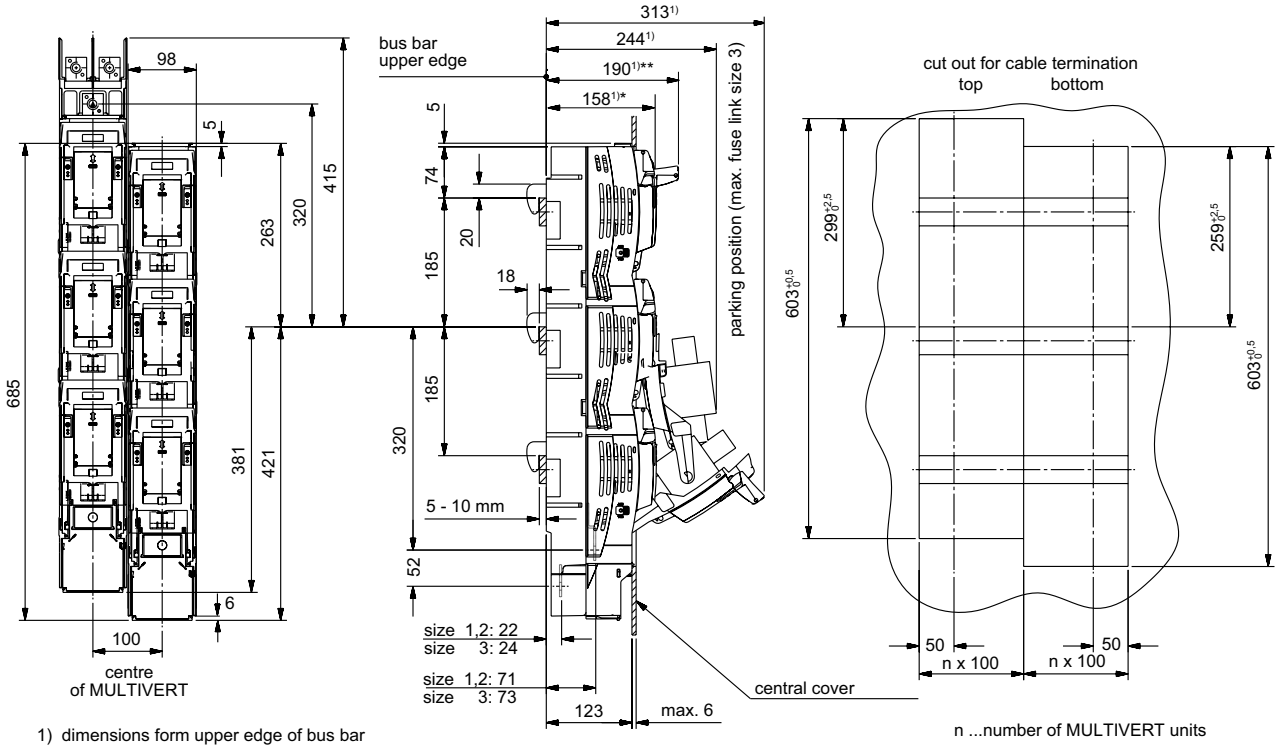

1) dimensions form upper edge of bus bar

n ...number of MULTIVERT units

* 158 mm handle in closed position (folded) = total installation depth of MULTIVERT
** 190 mm handle in open position (fixed) - switching position

Dimensions in mm

MERSEN reserves the right to change, update or correct, without notice, any information contained in this datasheet.

DIMENSIONS

MULTIVERT® 250A, 400A, 630A bus bar coppler switch with lateral terminals
3 x single pole switching

(M01159a)

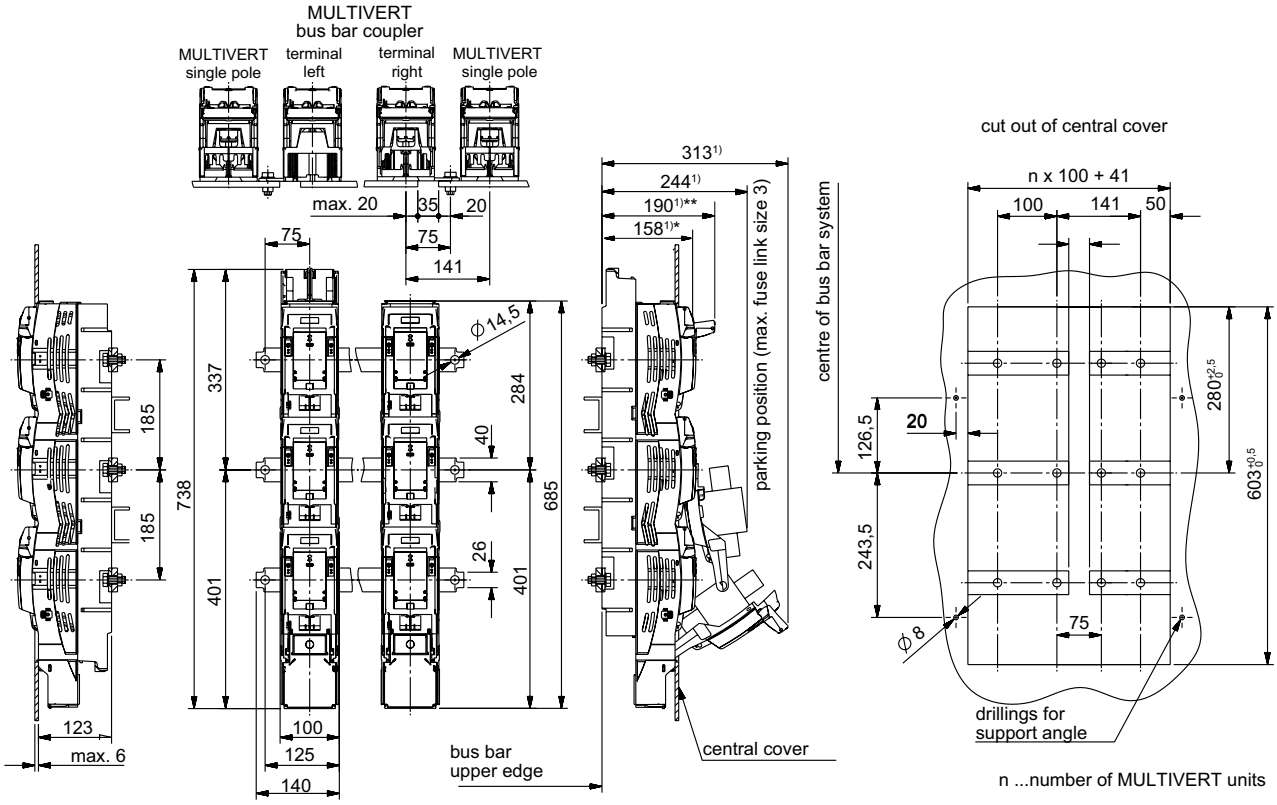

1) dimensions form upper edge of bus bar

* 158 mm handle in closed position (folded) = total installation depth of MULTIVERT
** 190 mm handle in open position (fixed) - switching position

Dimensions in mm

MERSEN reserves the right to change, update or correct, without notice, any information contained in this datasheet.

DIMENSIONS

Cable termination MULTIVERT® 250A, 400A, 630A (M01105b)

reference	B	E	V	
type of terminal	bolt	insert nut	V-terminal	
accessory	cable lug max. width 45 mm	cable lug max. width 45 mm	V-clamp (accessory)	
			22SZVK4	22SZVK41
cross section [mm²]	max. 300	max. 300	50 - 240 sectoral solid 50 - 185 sectoral stranded 35 - 70 round stranded 35 - 50 round solid	95 - 300 sectoral solid 70 - 240 sectoral stranded 50 - 185 round stranded 70 - 240 round solid
M [Nm]	35 ±3	35 ±3	25 ±2	25 ±2
	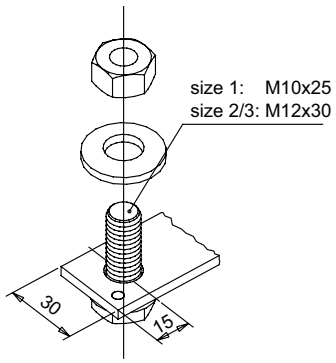	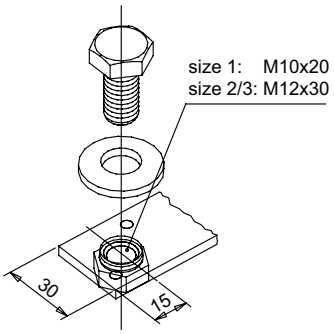	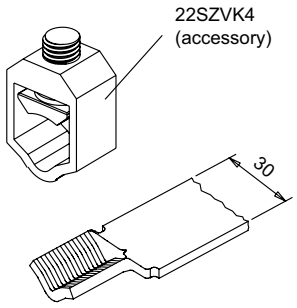	

Dimensions in mm

MERSEN reserves the right to change, update or correct, without notice, any information contained in this datasheet.

DIMENSIONS

Cable termination MULTIVERT® 250A, 400A, 630A multiple termination (M01156a)

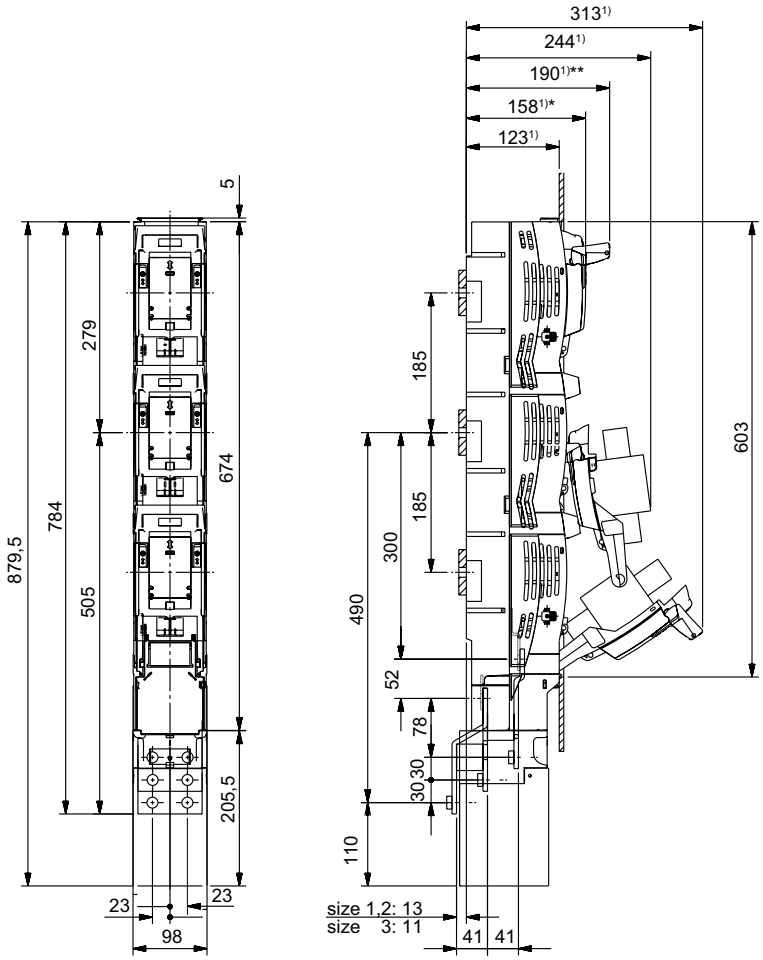

1) dimensions form upper edge of bus bar

* 158 mm handle in closed position (folded) = total installation depth of MULTIVERT
** 190 mm handle in open position (fixed) - switching position

Dimensions in mm

MERSEN reserves the right to change, update or correct, without notice, any information contained in this datasheet.

DIMENSIONS

Cable termination MULTIVERT® 250A, 400A, 630A multiple termination (MA88f)

terminal: 2 cable lugs

Cu: up to max. 300 mm² round stranded, sectoral stranded cable lugs in accordance with DIN 46235
Al: up to max. 300 mm2 round stranded, sectoral stranded cable lugs in accordance with DIN 46329
M: 32-38 Nm

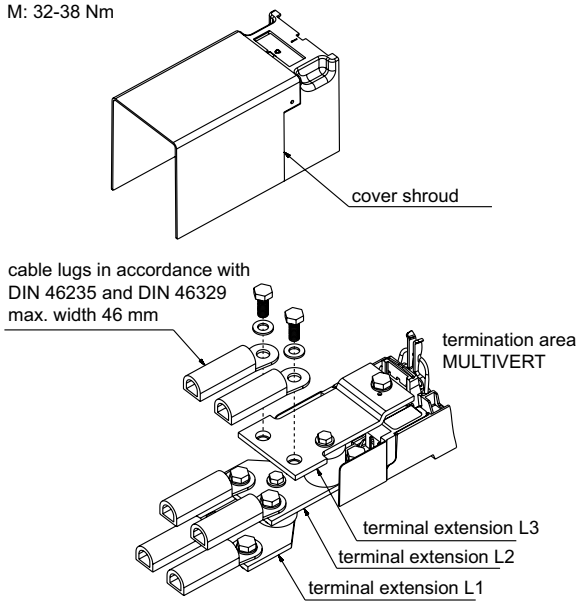

NOTE:
Due to safety precautions we suggest to insulate the cable lugs (185, 240 und 300 mm²).

terminal: 3 cable lugs

Cu: up to max. 150 mm² round stranded, sectoral stranded cable lugs in accordance with DIN 46235
M: 32-38 Nm

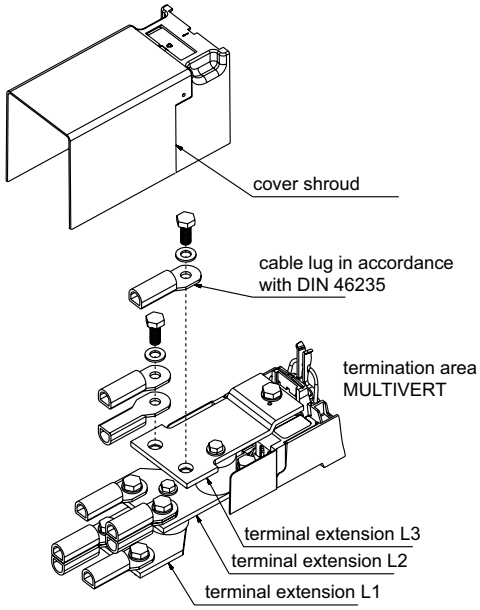

NOTE:
Due to safety precautions we suggest to insulate the cable lugs (95, 120 und 150 mm²).

Position of terminals

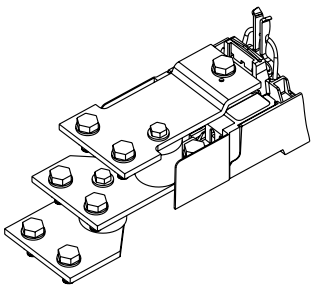

tightening torque of screws: 32 - 38 Nm

Dimensions in mm

MERSEN reserves the right to change, update or correct, without notice, any information contained in this datasheet.

DIMENSIONS

Cover shrouds for cable termination bottom terminal MULTIVERT® 250A, 400A, 630A (M01160a-1)

standarddesign:
integrated shroud for bottom cable termination

for terminal connections with cable lugs (bolt and insert nut)
- on switch boards with central cover

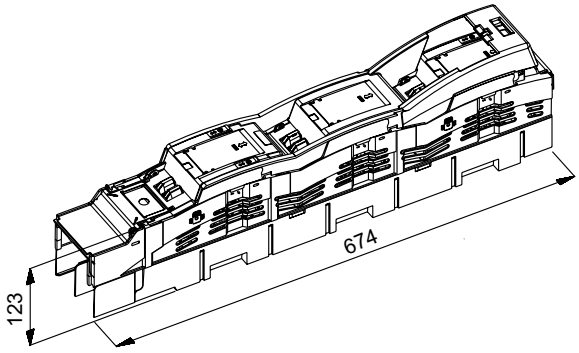

for clamp terminal connections (V-terminal)
for special "high" clamp terminal connections
(double V-clamps)
- on switch boards with central cover
and in feeder pillars

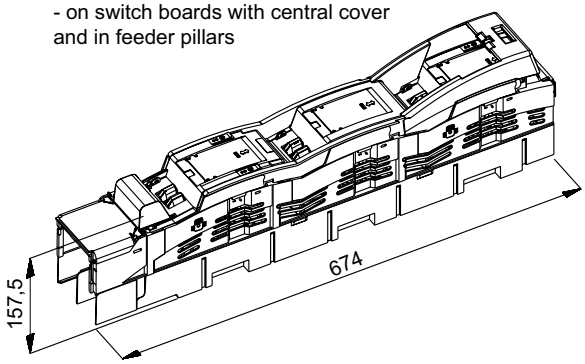

Extension shroud for bottom cable termination
article number 1.002.095 (accessory)

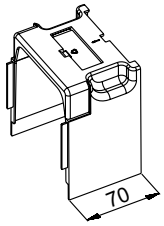

for extended cover
tor terminal connections with cable lugs (bolt and insert nut)
- on switch boards with central cover

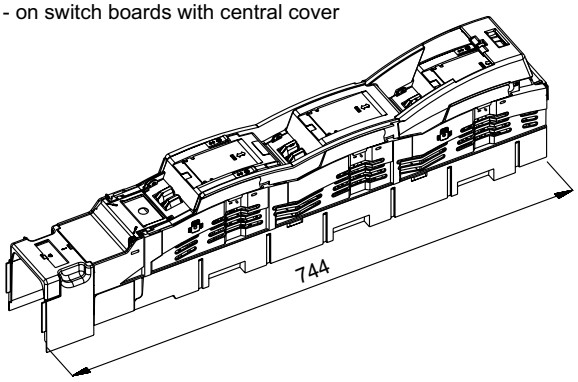

for extended cover
for clamp terminal connections (V-terminal)
for special "high" clamp terminal connections(double V-clamps)
- on switch boards with central cover
and in feeder pillars

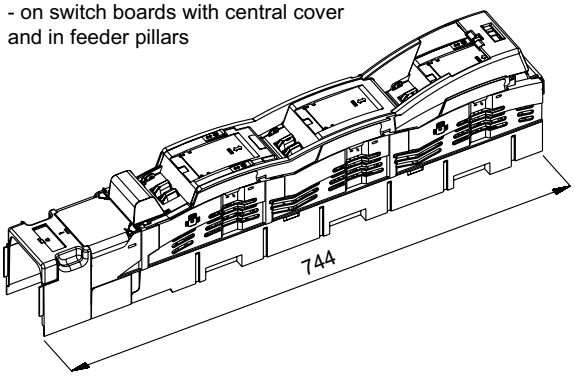

Dimensions in mm

MERSEN reserves the right to change, update or correct, without notice, any information contained in this datasheet.

DIMENSIONS

Cover shrouds for cable termination bottom terminal MULTIVERT® 250A, 400A, 630A multiple termination (M01160b-2)

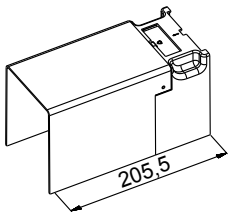

catalogue no. 1.002.458 - accessory

for application multiple termination
for cable termination with 2 or 3 cable lugs/phase
see MA 88
- on switch boards with cover shroud

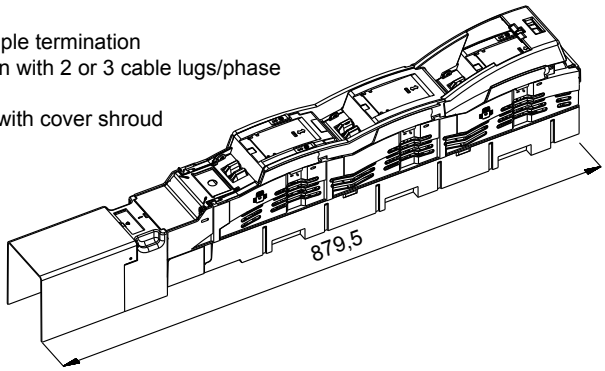

for application multiple termination
for V-terminal: terminal lugs: 2 terminals per phase with V-clamp
- on switch boards with central cover
and in feeder pillars

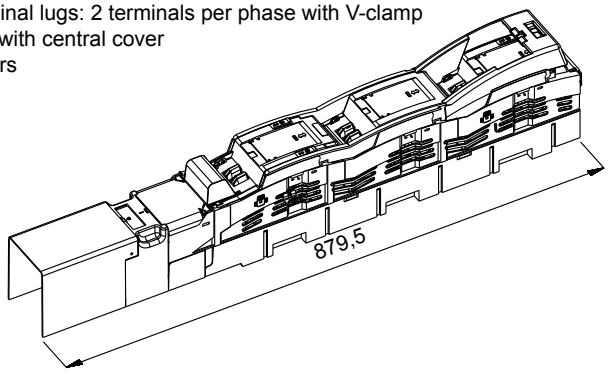

Dimensions in mm

MERSEN reserves the right to change, update or correct, without notice, any information contained in this datasheet.

DIMENSIONS

Cover shrouds for cable termination top terminal MULTIVERT® 250A, 400A, 630A (M01160a-3)

without shroud for cable termination

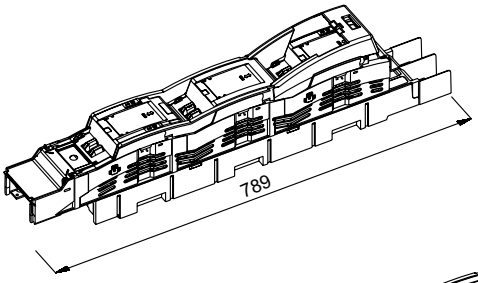

shroud for top cable termination
article number: MZKHO (accessory)
for terminal connections with
cable lugs (bolt and insert nut)
- on switch boards with central cover

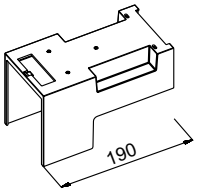

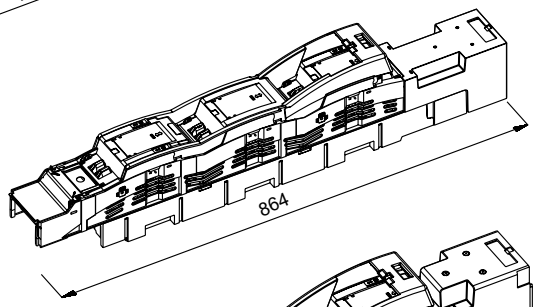

shroud for top cable termination
article number: MZKAB (accessory)
for clamp terminal connections
(V-terminal)
- in feeder pillars

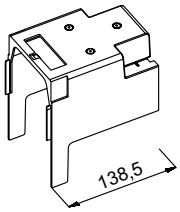

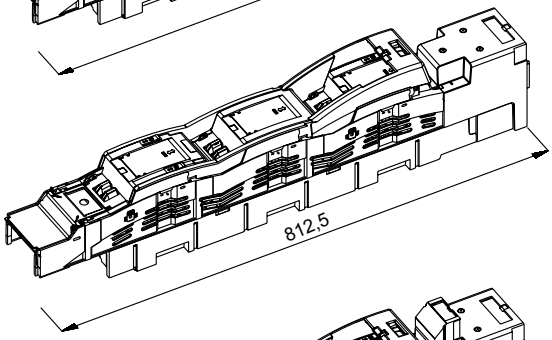

shroud for top cable termination
article number: MZKAB1 (accessory)
for special “high“ clamp terminal
connections (double V-clamps)
- in feeder pillars

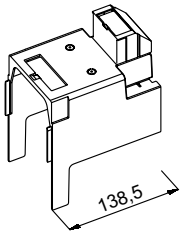

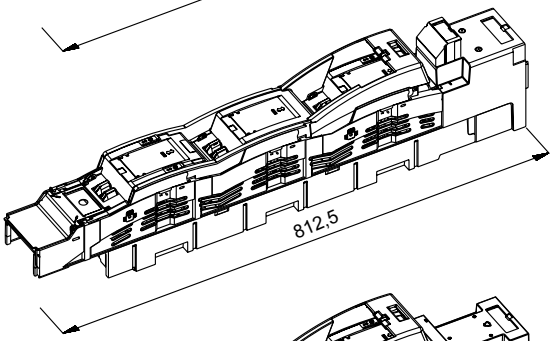

shroud for top cable termination
article number: MZKHV (accessory)
for terminal connections with cable lugs
for installation in distribution units
with central cover

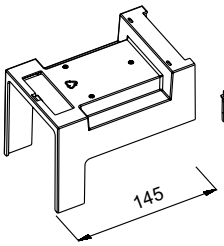

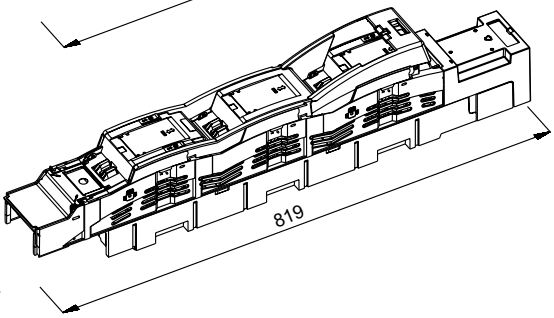

Dimensions in mm

MERSEN reserves the right to change, update or correct, without notice, any information contained in this datasheet.

EXPLODED SKETCH

MULTIVERT® 250A, 400A, 630A 3x single pole switching (E 1.002.265a)

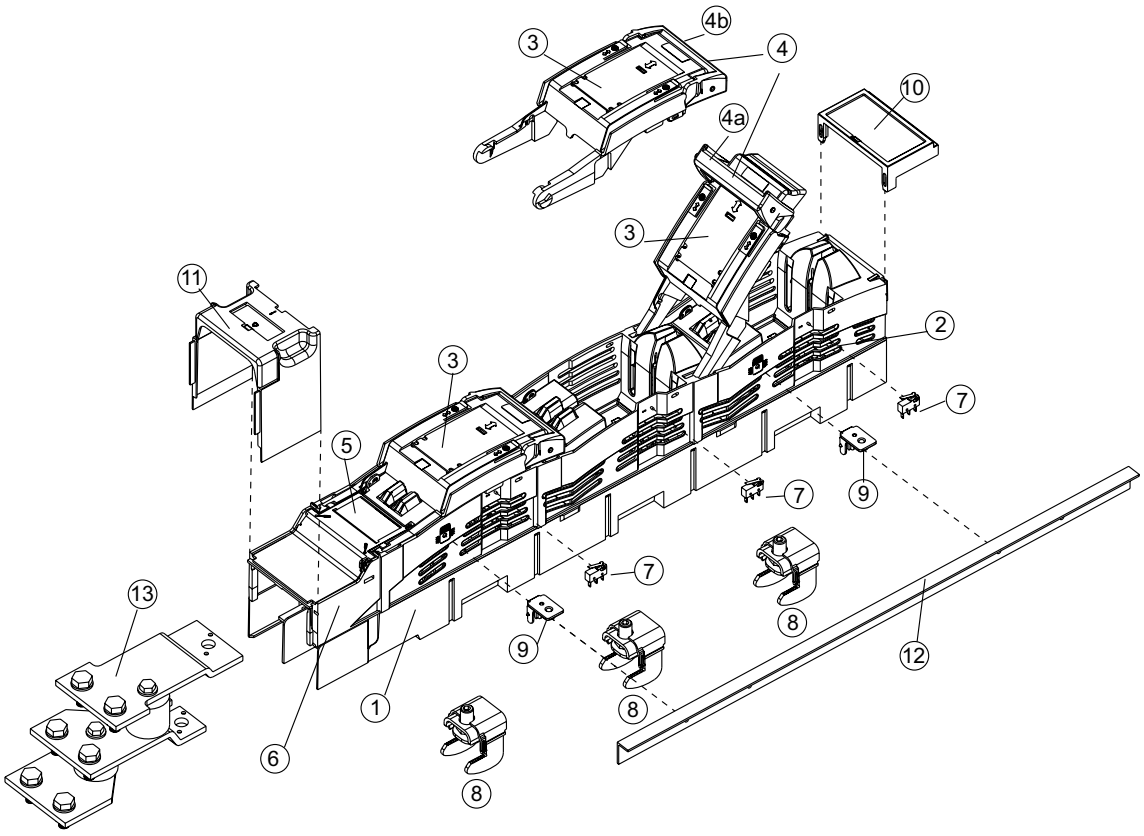

no.	articlenumber	short Description
1		Main base
2		Protection cover (removable)
3		Switch operating cover triple pole
4		Combination handle: 4a. open - switching position; 4b. Closed - installation depth 158mm
5		Labelling area (label)
6		Integrated cover shroud
7	1.000.852	indicator for switch door position
8	1.000.192	Hooked clamp, 1 set = 3 pieces
9	MZAW	Support angle, 1 set = 4 pieces
10	MZBT	Label holder
11	1.002.095	Cover shroud, bottom terminal, 70mm
12	1.001.510	cover shield, length 605mm, set=2 pieces
13	1.002.255	Supplementary set for multiple terminal

MERSEN reserves the right to change, update or correct, without notice, any information contained in this datasheet.

EXPLODED SKETCH

MULTIVERT® 250A, 400A, 630A 1x triple pole switching (E 1.002.266)

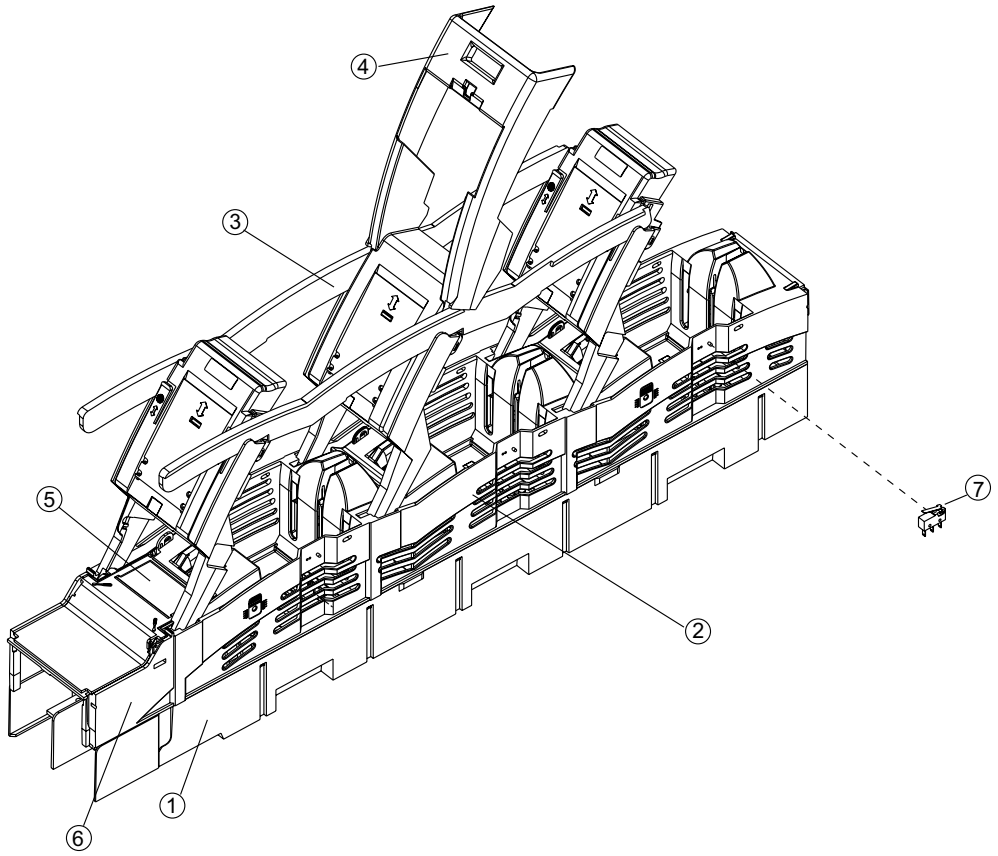

no.	articlenumber	short Description
1		Main base
2		Protection cover (removable)
3		Switch operating cover triple pole
4		Handle
5		Labelling area (label)
6		Integrated cover shroud
7	1.000.852	indicator for switch door position

MERSEN reserves the right to change, update or correct, without notice, any information contained in this datasheet.

ACCESSORIES

1.002.095

1.002.458

MZKAB

MZKHO

MZKAB1

MZVHB

MZKHV

Cover/shrouds for cable termination

Catalog number	Reference number	Design	Appli-cation	Weight	Package
1.002.095	J1002279	cover shroud for extended cover length 70 mm	bottom terminal	0.116 kg	1 piece
1.002.458	N1023305	cover shroud for multiple termination length 205,5mm	bottom terminal	0.164 kg	1 piece
MZKAB	J1023301	cover shroud for clamp terminal connection in feeder pillars length 138,5 mm	top terminal	0.101 kg	1 piece
MZKHO	G217655	cover shroud for cable terminal connections with cable lugs on switchboards with central cover length 190 mm	top terminal	0.126 kg	1 piece
MZKAB1	K1023302	cover shroud for special (high) clamp terminal connection in feeder pillars length 138,5 mm	top terminal	0.115 kg	1 piece
MZVHB	L1023303	extended cover shroud length 257 mm	top terminal	0.225 kg	1 piece
MZKHV	A1002202	cover shroud for installation in distribution units with central cover (height of supporting edge reduced by 16 mm) length 145 mm	top terminal	85 g	1 piece

1.001.510

MZAW

Covers/level & system adjustment covers

Catalog number	Reference number	Design	Weight	Package
1.001.510	K1002280	cover shield to support central cover 1 set = 2 pieces	0.15 kg	1 set
MZAW	D218687	support angle for support of cover plate 1 set = 4 pieces	27 g	1 set

MERSEN reserves the right to change, update or correct, without notice, any information contained in this datasheet.

ACCESSORIES

MZ01LPAP

MZLPAP

1.002.493

Covers/spare way covers

Catalog number	Reference number	Design	Application	Weight	Package
MZ01LPAP	C1023410	spare way cover without level adjustment width 50 mm, length 500 mm including fixing material	bus bar system 185 mm	60 g	1 piece
MZLPAP	D1023411	spare way cover width 100 mm, length 612 mm including 2 pieces M12 fixing screws (distance of fixing holes 185 mm)	bus bar system 185 mm	0.56 kg	1 piece
1.002.493	N1002283	spare way cover width 50 mm, length 630 mm for covering of open installation spaces in distribution units with central cover	bus bar system 185 mm	0.136 kg	1 piece
1.002.492	M1002282	spare way cover width 100 mm, length 630 mm for covering of open installation spaces in distribution units with central cover	bus bar system 185 mm	0.202 kg	1 piece
1.002.830	E1023412	spare way cover width 50 mm, length 630 mm with level adjustment 123 mm for bus bar installation, set = cover + fixing set (2 distance pieces, 2 screw rivets)	bus bar system 185 mm	0.203 kg	1 set
1.002.829	F1023413	spare way cover width 100 mm, length 630 mm with level adjustment 123 mm for bus bar installation set = cover + fixing set (2 distance pieces, 2 screw rivets)	bus bar system 185 mm	0.27 kg	1 set

1.002.492

1.002.830

1.002.829

1.002.648

1.000.192

Installation devices/bus bar installation

Catalog number	Reference number	Design	Weight	Package
1.002.648	T1023448	M12 insert nut, size 2 and 3 1 set = 30 pieces	0.28 kg	1 set
1.000.192	P1002284	hooked clamp size 1, 2, 3, M = 15–20 Nm hexagon socket connection (inbus) for MULTIVERT®/BSL with top or bottom terminal 1 set = 3 pieces	0.467 kg	1 set

MERSEN reserves the right to change, update or correct, without notice, any information contained in this datasheet.

ACCESSORIES

1.002.940

MZESM

1.000.829

1.000.852

Indication facilities

Catalog number	Reference number	Design	Weight	Package
1.002.940	Z1023453	electronic fuse monitoring ESÜ size 1,2,3 for MULTIVERT® 250 A, 400 A, 630 A with cabling of instrument leads (rated voltage 525VAC)	0.85 kg	1 piece
MZESM	J228766	Electronic System Monitor ESM size 1,2,3 for MULTIVERT® 250 A, 400 A, 630 A with cabling of instrument leads	0.104 kg	1 piece
1.000.829	L1023418	electro-mechanical fuse monitoring (galvanic isolation) MZS size 1,2,3 for MULTIVERT® 250 A, 400 A, 630 A with cabling of instrument leads	0.314 kg	1 piece
1.000.852	Q1002285	indicator for switch door position micro switch, 1 change-over contact 5 A, 250 V	0.09 kg	1 piece

1.000.102

1.000.103

1.000.109

Amperemeter units

Catalog number	Reference number	Design	Weight	Package
1.000.102	M1023281	size 1, 2, 3, 250 A, with drag indicator, single pole measurement	83 g	1 piece
1.000.103	N1023282	size 2, 3, 400 A, with drag indicator, single pole measurement	83 g	1 piece
1.000.108	T1023287	size 1, 2, 3, 250 A, with drag indicator, triple pole measurement (optional L1, L2, L3)	83 g	1 piece
1.000.109	V1023288	size 2, 3, 400 A, with drag indicator, triple pole measurement (optional L1, L2, L3)	83 g	1 piece

1.002.294

1.002.295

Amperemeter for direct frontal installation

Catalog number	Reference number	Design	Weight	Package
1.002.294	G1023276	size 2/3, 400 / 200 / 5A, with drag indicator, for NH-measuring fuse link, single pole measurement	0.14 kg	1 piece
1.002.295	H1023277	size 2/3, 600 / 300 / 5A, with drag indicator, for NH-measuring fuse link, single pole measurement	0.14 kg	1 piece

1.002.290

NH-measuring fuse links

Catalog number	Reference number	Design	Weight	Package
1.002.290	J1023416	size 2, 400 A C.T. current = 400/5A or 200/5A, distance between plugs 50 mm	0.67 kg	1 piece

MERSEN reserves the right to change, update or correct, without notice, any information contained in this datasheet.

ACCESSORIES

1.200.000 + 1.002.288

Fused tee off adapter facility

Catalog number	Reference number	Design	Weight	Package
1.002.288	X1023290	fused tee off adapter facility, length of blade contacts 106 mm for NH-fuse links size 00 max. 100 A, for applicatiion in MULTIVERT® 250 A, 400 A, 630 A	0.535 kg	1 piece

MZ3SW400

MZPR600

Current transformers/external current transformers

Catalog number	Reference number	Design	Weight	Package
MZ1SW250	K1024567	current transformer up to 250/5A for single pole measurement, class 1 set = 1 piece current transformer + 3 pieces distance tubes for level adjustment, 1 piece installed in the current transformer, 2 pieces additionally packed	0.88 kg	1 set
MZ1SW400	N1024570	current transformer up to 400/5A for single pole measurement, class 1 set = 1 piece current transformer + 3 pieces distance tubes for level adjustment, 1 piece installed in the current transformer, 2 pieces additionally packed	0.89 kg	1 set
MZ3SW250	M1024569	current transformer up to 250/5A for triple pole measurement, class 1 set = 3 pieces current transformer with distance tubes for level adjustment, 3 pieces installed in the current transformer	1.38 kg	1 set
MZ3SW400	Q1024572	current transformer up to 400/5A for triple pole measurement, class 1 set = 3 pieces current transformer with distance tubes for level adjustment, 3 pieces installed in the current transformer	1.43 kg	1 set
SZ1SW250	L1024568	current transformer up to 250/5A, class 1, for single pole measurement	0.43 kg	1 piece
SZ1SW400	P1024571	current transformer up to 400/5A, class 1, for single pole measurement	0.46 kg	1 piece
MZPR600	S1024597	distance tube for level adjustment, up to 600/5A, supplementary set for neighbouring MULTIVERT® without measurement to obtain uniform profile in height 1 set = 3 pieces	0.62 kg	1 set

MERSEN reserves the right to change, update or correct, without notice, any information contained in this datasheet.

ACCESSORIES

MZEGK

MZEM

MZBT

Earthing unit

Catalog number	Reference number	Design	Weight	Package
MZEGK	V1024576	complete earthing unit including 3 pieces earthing links	5.4 kg	1 piece
MZEM	W1024577	earthing link size 1, 2, 3	0.5 kg	1 piece

Labelling facilities

Catalog number	Reference number	Design	Weight	Package
MZBT	B222181	label holder size 1, 2, 3	0.03 kg	1 piece

MERSEN reserves the right to change, update or correct, without notice, any information contained in this datasheet.

ACCESSORIES

1.002.909

1.002.910

22SZVK42

1.000.099

1.003.286

1.001.667

1.002.255

1.003.377

Varieties of cable termination

Catalog number	Reference number	Design	Weight	Package
1.002.909	K1024613	V-terminal clamp size 1,2,3, 95-240 mm² single solid, 70-240 mm² single stranded, 50-185 mm² round stranded, 70-240 mm² round solid, M = 23 -27 Nm 1 set = 3 pieces	0.243 kg	1 set
1.002.910	L1024614	V-terminal clamp size 1,2,3, 95-300 mm² single solid, 70-240 mm² single stranded, 50-185 mm² round stranded, 70-240 mm² round solid, M = 23 -27 Nm 1 set = 3 pieces	0.258 kg	1 set
22SZVK42	Q1024618	V-terminal clamp size 1,2,3 for 2 conductors 50–240 mm²single solid, 50-185 mm² single stranded, 50-185 mm² round stranded, 70-240 mm² round solid M = 23–27 Nm	6.8 g	1 piece
1.000.099	E1023436	insulation cap for V-terminal clamp size 1,2,3	0.1 g	1 piece
1.003.286	Q1024595	supplementaty set for V-terminal size 1,2,3 set = 3 pieces V-clamps, cover shroud and labels for size 1, 2 and 3	0.232 kg	1 set
1.001.667	F1023275	adapter for double terminal L3	0.25 kg	1 piece
1.002.255	B1024582	supplementary set for multiple termination, bottom terminal 2 cable lugs Cu/Al: up to max. 300 mm² round stranded, sectoral stranded, 3 cable lugs Cu: up to max. 150 mm² round stranded, sectoral stranded, M = 32-38 Nm	1.682 kg	1 set
1.003.377	Y1024579	supplementary set for multiple termination, top terminal 2 cable lugs Cu/Al: up to max. 300 mm² round stranded, sectoral stranded, 3 cable lugs Cu: up to max. 150 mm² round stranded, sectoral stranded, M = 32-38 Nm	1.743 kg	1 set

MERSEN reserves the right to change, update or correct, without notice, any information contained in this datasheet.