億力光電股份有限公司

EVERVISION ELECTRONICS CO., LTD.

Product Specification For LCD Module

(KVPF-7B-002-16)

Model NO. : VGG804806-6UFLWA(RoHS)

REVISION : 2

☐APPROVAL FOR SPECIFICATIONS ONLY

■APPROVAL FOR SPECIFICATIONS AND SAMPLE

CUSTOMER :	APPROVED BY :
STD.	

EVERVISION LCM R&D CENTER			
APPROVED BY	CHECKED BY	PREPARED BY	
李正 11/17/08	張乃元 11/17/08	張正 11/17/08	呂清 11/17/08
DIRECTOR	MANAGER	Mechanism Engineer	Electronic Engineer

億力光電股份有限公司總公司
EVERVISION ELECTRONICS LTD.
台北縣中和市建一路 186 號 12 樓
12F,NO.186, JIAN 1st RD., CHUNG HO CITY,
TAIPEI HSIEN, TAIWAN, R.O.C
TEL : +886 2 8227-2788
FAX : +886 2 8227-2789

東莞莞城德寶電子廠
EVERVISION ELECTRONICS(B.V.I) LTD.
廣東省東莞市城區東縱大道天寶路 9 號
NO.9,Tian Bao Rd.,Dong Zong St.,Dong Guan City
Guang Dong. China.
TEL : +86 769 2220 5258
FAX : +86 769 2220 7258

億力光電股份有限公司台中分公司
EVERVISION ELECTRONICS(T.C) LTD.
台中縣潭子鄉台中加工出口區建國路 19 號
NO.19,CHIEN KUO ROAD.T.E.P.Z TANTZE
427 TAICHUNG HSIEN TAIWAN R.O.C
TEL : +886 4 2532-8889
FAX : +886 4 2532-6689

勁佳光電(昆山)有限公司
EVERVISION ELECTRONICS(KUNSHAN) LTD.
江蘇省昆山市玉山鎮高科技工業園城北路 8 號
NO.8,Chengbei Rd., Hi-Tech Industry Park ,
Yushan Town , Kunshan City , Jiangsu,China.
TEL : +86 512 5778 7288
FAX : +86 512 5777 0688

http://www.evervisionlcd.com

1. Table of Contents

No.	Contents	Page
1	Table of Contents	2
2	Record of Revisions	3
3	Module Numbering System	4
4	Application	5
5	Features	5
6	General Specifications	5
7	Absolute Maximum Ratings	6
8	Electrical Characteristics	7
9	Block Diagram	8
10	Input / Output Terminals Pin Assignment	9
11	Interface Timing	12
12	Optical Characteristics	14
13	Reliability Test	17
14	Packaging	18
15	Precautions	19
16	Outline Drawing	20
17	Definition of Labels	21
18	Incoming Inspection Standards	23

2. Record of Revisions

Rev.	Comments	Page	Date
1	Preliminary Specification was first issued.	All	5/21'08
2	Modify 6. General Specifications	5	11/14'08
2	Modify 8. Electrical Characteristics	7	11/14'08
2	Modify 12. Optical Characteristics	14	11/14'08

3. Module Numbering System

V G G 8048 06 – 6 U F L W A

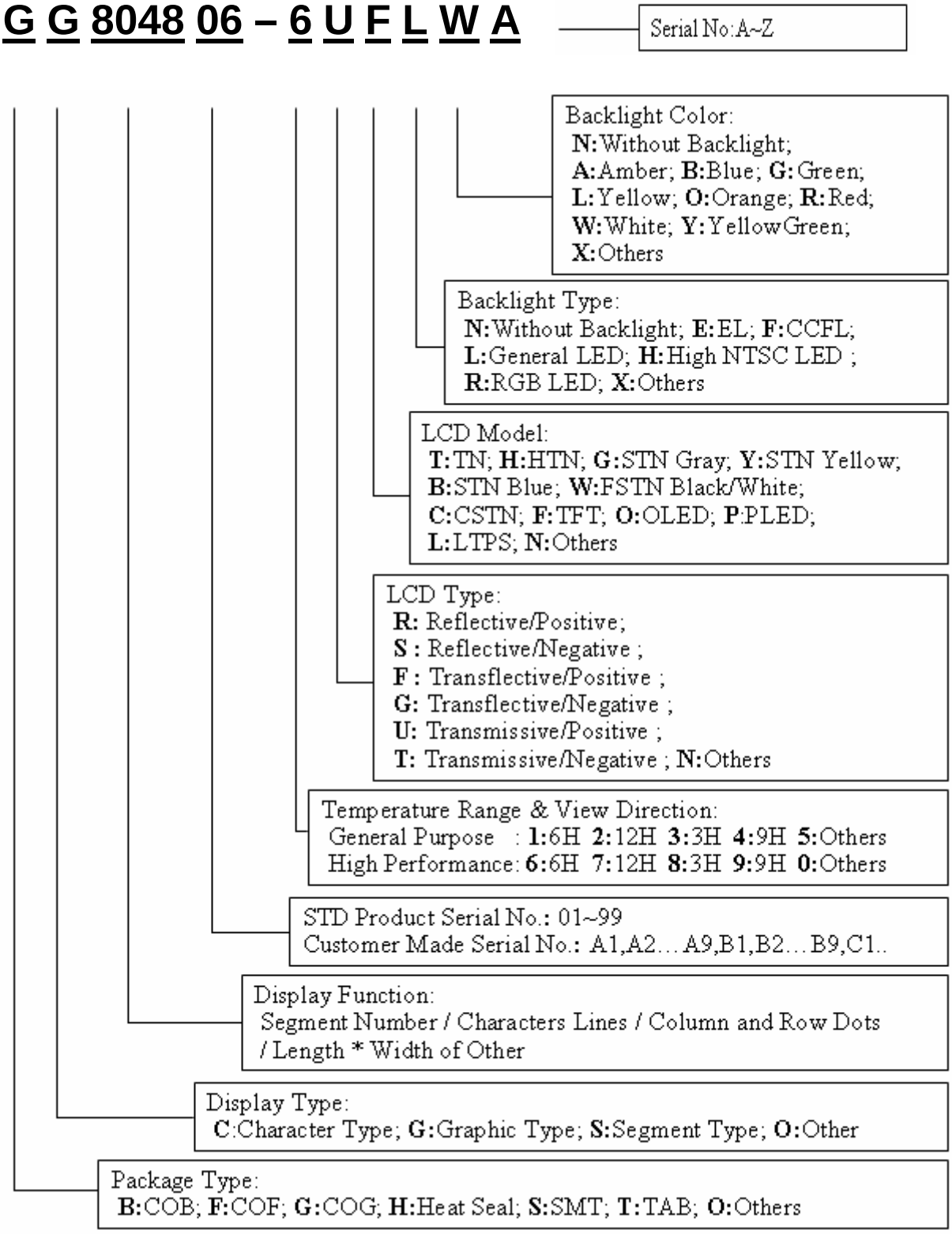

4. Application

This specification is applied to the 7 inch WVGA supported TFT-LCD module, and can display true 262,144 colors(6 bit/ color). The module is designed for OA, Car TV application and other electronic products which require flat panel display of digital signal interface. This module is composed of a 7”TFT-LCD panel, a driver circuit and backlight unit.

5. Features

- WVGA (800×480 pixels) resolution.
- Digital 18 bit parallel RGB.
- Dot inversion mode with stripe type.

6. General Specifications

Item	Specifications	Unit
Screen Size	7 (Diagonal)	inch
Display Format	800RGB(H)×480(V)	dot
Active Area	152.4(H)×91.44(V)	mm
Dot Size	0.0635(H)×0.1905(V)	mm
Pixel Configuration	RGB Vertical Stripe	-
Display Mode	TN Type Transmissive Mode Normally White	-
Surface Treatment	Anti-Glare and Hard Coating(3H)	-
Viewing Direction	6 O’clock (The Gray Inversion will appear at this direction)	-
Outline Dimension	166.6(W)×109.4(H)×10.0(D)	mm
Weight	(164)	g

7. Absolute Maximum Ratings

7.1 Absolute Ratings of Environment

Item	Symbol	Value		Unit	Note
		Min.	Max.		
Storage Temperature	T_{ST}	-30	+80	°C	(1)
Operating Ambient Temperature	T_{OP}	-20	+70	°C	(1)

Note (1) Temperature and relative humidity range are shown in the figure below.

(a) 85%RH Max. (Ta≦40°C).

(b) Wet-bulb temperature should be 39°C Max. (Ta>40°C).

(c) No condensation.

7.2 Electrical Absolute Ratings

7.2.1 TFT-LCD Module

(Ta=25±2°C, GND=V_{SS}=0V)

Item	Symbol	Value		Unit	Note
		Min.	Max.		
Digital Power Supply Voltage	V_{CC}	-0.3	4.3	V	-

7.2.2 Backlight Unit

(Ta=25±2°C)

Item	Symbol	Value		Unit	Note
		Min.	Max.		
Current of Backlight Unit	I_B	-	250	mA	(1)
Voltage of Backlight Unit	V_B	-	15	V	(1)

Note (1) Permanent damage to the device may occur if maximum values are exceeded or reverse voltage is loaded.

8. Electrical Characteristics

8.1 TFT-LCD Module

(Ta=25±2°C)

Item	Symbol	Value			Unit	Note
		Min.	Typ.	Max.		
Power Supply Voltage	V_{CC}	3.0	3.3	3.6	V	-
Power Supply Current	I_{CC}	-	190	266	mA	(1)
Input High Threshold Voltage	V_{IH}	$0.7V_{CC}$	-	V_{CC}	V	-
Input Low Threshold Voltage	V_{IL}	0	-	$0.3V_{CC}$	V	-
Power Consumption	P_L	-	627	877.8	mW	(1)
VSYNC Frequency	F_V	-	60	-	Hz	-
DCLK Frequency	DCLK	-	33.26	-	MHz	-

Note (1) The specified power consumption is under the conditions at V_{CC}=3.3V, F_V=60Hz, whereas a power dissipation check pattern below is displayed.

Black Pattern / 0 Gray

Active Area

8.2 Backlight Unit

(Ta=25±2°C)

Item	Symbol	Value			Unit	Note
		Min.	Typ.	Max.		
Current of Backlight Unit	I_B	-	200	-	mA	-
Voltage of Backlight Unit	V_B	-	9.9	-	V	I_B =200mA
Power Consumption	P_{BL}	-	(1.98)	-	W	I_B =200mA
LED Life Time(25℃)	-	40000	-	-	hr	(1)

Note (1)：LED life time is defined as under 25±2°C , when the average brightness decrease to 50% of original brightness

9. Block Diagram

9.1 TFT-LCD Module with Backlight Unit

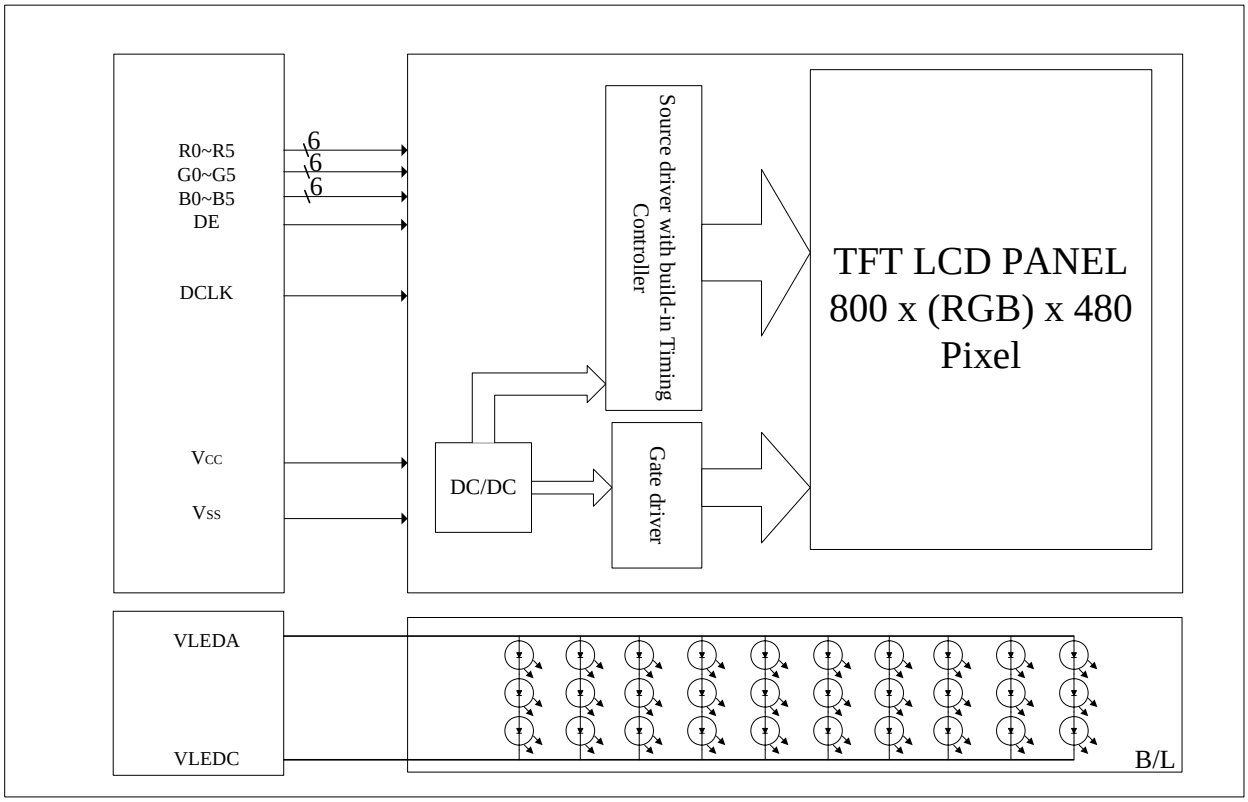

10. Input / Output Terminals Pin Assignment

10.1 TFT-LCD Module

Connector: JAE FA5B040HP1

Pin No.	Symbol	I/O	Description
1	V_{CC}	I	+3.3V power supply
2	V_{CC}	I	+3.3V power supply
3	V_{CC}	I	+3.3V power supply
4	V_{CC}	I	+3.3V power supply
5	NC	I	No Connect
6	DE	I	Input data enable control
7	V_{SS}	I	Ground
8	NC	I	No Connect
9	V_{SS}	I	Ground
10	NC	I	No Connect
11	V_{SS}	I	Ground
12	B5	I	Blue data(MSB)
13	B4	I	Blue data
14	B3	I	Blue data
15	V_{SS}	I	Ground
16	B2	I	Blue data
17	B1	I	Blue data
18	B0	I	Blue data(LSB)
19	V_{SS}	I	Ground
20	G5	I	GREEN data(MSB)
21	G4	I	GREEN data
22	G3	I	GREEN data
23	V_{SS}	I	Ground
24	G2	I	GREEN data
25	G1	I	GREEN data
26	G0	I	GREEN data(LSB)
27	V_{SS}	I	Ground
28	R5	I	RED data(MSB)
29	R4	I	RED data
30	R3	I	RED data

Pin No.	Symbol	I/O	Description
31	V_{SS}	I	Ground
32	R2	I	RED data
33	R1	I	RED data
34	R0	I	RED data (LSB)
35	NC	I	No Connect
36	V_{SS}	I	Ground
37	V_{SS}	I	Ground
38	DCLK	I	Dot Clock
39	V_{SS}	I	Ground
40	V_{SS}	I	Ground

10.2 Backlight Unit

Connector: JST BHSR-02VS-1(N)

Pin No.	Symbol	I/O	Description	Wire Color
1	VLEDA	I	Backlight LED Anode.	Red
2	VLEDC	I	Backlight LED Cathode.	Black

10.3 Color Data Input Assignment

The brightness of each primary color(red, green and blue) is based on the 6 bit gray scale data input for the color. The higher the binary input, the brighter the color. The table provides the assignment of color versus data input.

Color		Data Signal																	
		Red						Green						Blue					
		R5	R4	R3	R2	R1	R0	G5	G4	G3	G2	G1	G0	B5	B4	B3	B2	B1	B0
Basic Colors	Black	0	0	0	0	0	0	0	0	0	0	0	0	0	0	0	0	0	0
	Red	1	1	1	1	1	1	0	0	0	0	0	0	0	0	0	0	0	0
	Green	0	0	0	0	0	0	1	1	1	1	1	1	0	0	0	0	0	0
	Blue	0	0	0	0	0	0	0	0	0	0	0	0	1	1	1	1	1	1
	Cyan	0	0	0	0	0	0	1	1	1	1	1	1	1	1	1	1	1	1
	Magenta	1	1	1	1	1	1	0	0	0	0	0	0	1	1	1	1	1	1
	Yellow	1	1	1	1	1	1	1	1	1	1	1	1	0	0	0	0	0	0
	White	1	1	1	1	1	1	1	1	1	1	1	1	1	1	1	1	1	1
Gray Scale Of RED	Red(0) / Dark	0	0	0	0	0	0	0	0	0	0	0	0	0	0	0	0	0	0
	Red(1)	0	0	0	0	0	1	0	0	0	0	0	0	0	0	0	0	0	0
	Red(2)	0	0	0	0	1	0	0	0	0	0	0	0	0	0	0	0	0	0
	:	:	:	:	:	:	:	:	:	:	:	:	:	:	:	:	:	:	:
	:	:	:	:	:	:	:	:	:	:	:	:	:	:	:	:	:	:	:
	Red(61)	1	1	1	1	0	1	0	0	0	0	0	0	0	0	0	0	0	0
	Red(62)	1	1	1	1	1	0	0	0	0	0	0	0	0	0	0	0	0	0
	Red(63)	1	1	1	1	1	1	0	0	0	0	0	0	0	0	0	0	0	0
Gray Scale Of Green	Green(0) / Dark	0	0	0	0	0	0	0	0	0	0	0	0	0	0	0	0	0	0
	Green(1)	0	0	0	0	0	0	0	0	0	0	0	1	0	0	0	0	0	0
	Green(2)	0	0	0	0	0	0	0	0	0	0	1	0	0	0	0	0	0	0
	:	:	:	:	:	:	:	:	:	:	:	:	:	:	:	:	:	:	:
	:	:	:	:	:	:	:	:	:	:	:	:	:	:	:	:	:	:	:
	Green(61)	0	0	0	0	0	0	1	1	1	1	0	1	0	0	0	0	0	0
	Green(62)	0	0	0	0	0	0	1	1	1	1	1	0	0	0	0	0	0	0
	Green(63)	0	0	0	0	0	0	1	1	1	1	1	1	0	0	0	0	0	0
Gray Scale Of Blue	Blue(0) / Dark	0	0	0	0	0	0	0	0	0	0	0	0	0	0	0	0	0	0
	Blue(1)	0	0	0	0	0	0	0	0	0	0	0	0	0	0	0	0	0	1
	Blue(2)	0	0	0	0	0	0	0	0	0	0	0	0	0	0	0	0	1	0
	:	:	:	:	:	:	:	:	:	:	:	:	:	:	:	:	:	:	:
	:	:	:	:	:	:	:	:	:	:	:	:	:	:	:	:	:	:	:
	Blue(61)	0	0	0	0	0	0	0	0	0	0	0	0	1	1	1	1	0	1
	Blue(62)	0	0	0	0	0	0	0	0	0	0	0	0	1	1	1	1	1	0
	Blue(63)	0	0	0	0	0	0	0	0	0	0	0	0	1	1	1	1	1	1

11. Interface Timing

11.1 Input Signal Characteristics

PARAMETER	Symbol	Spec.			Unit
		Min.	Typ.	Max.	
DCLK frequency	F_{CPH}	-	33.26	-	MHz
DCLK period	T_{CPH}	-	30.06	-	ns
DCLK pulse duty	T_{CWH}	40	50	60	%
DE period	$T_{DEH}+T_{DEL}$	1000	1056	1200	T_{CPH}
DE pulse width	T_{DEH}	-	800	-	T_{CPH}
DE frame blanking	T_{DEB}	10	45	110	$T_{DEH}+T_{DEL}$
DE frame width	T_{DE}	-	480	-	$T_{DEH}+T_{DEL}$
Data setup time	T_{dsu}	6	-	-	ns
Data hold time	T_{dhd}	6	-	-	ns
DE setup time	T_{esu}	6	-	-	ns

11.2 Waveform

11.2.1 Clock and data input waveforms

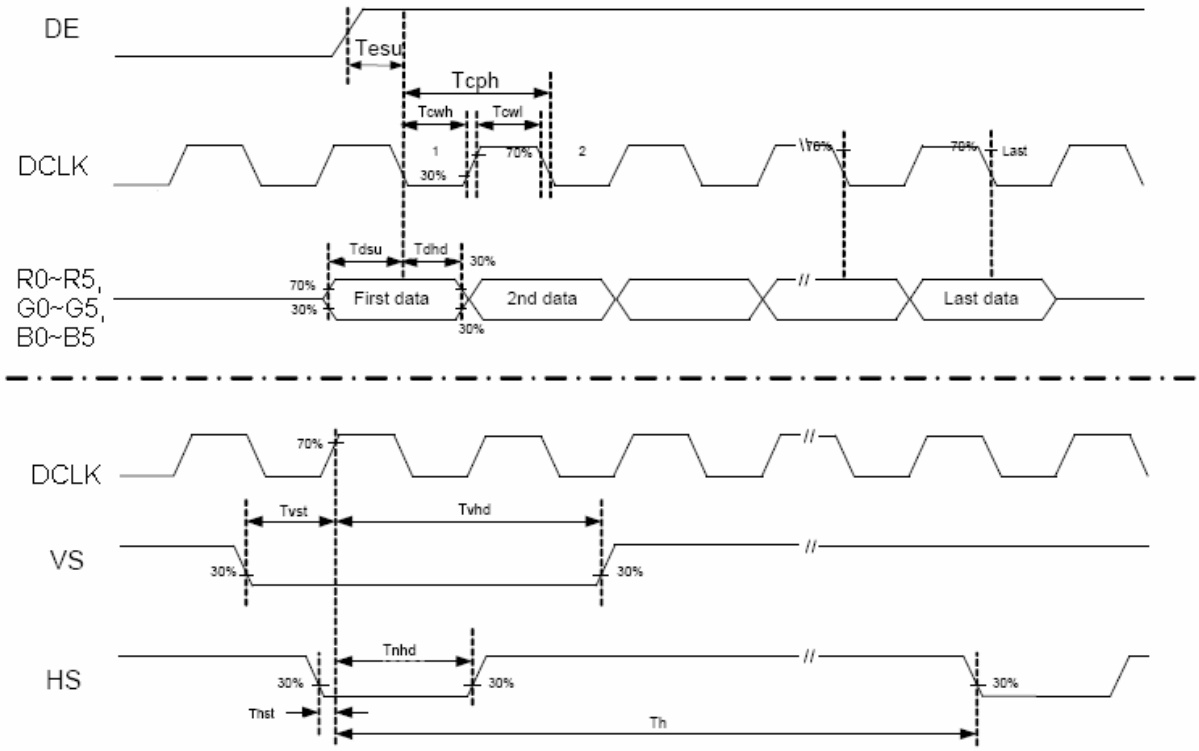

11.2.2 Data input format

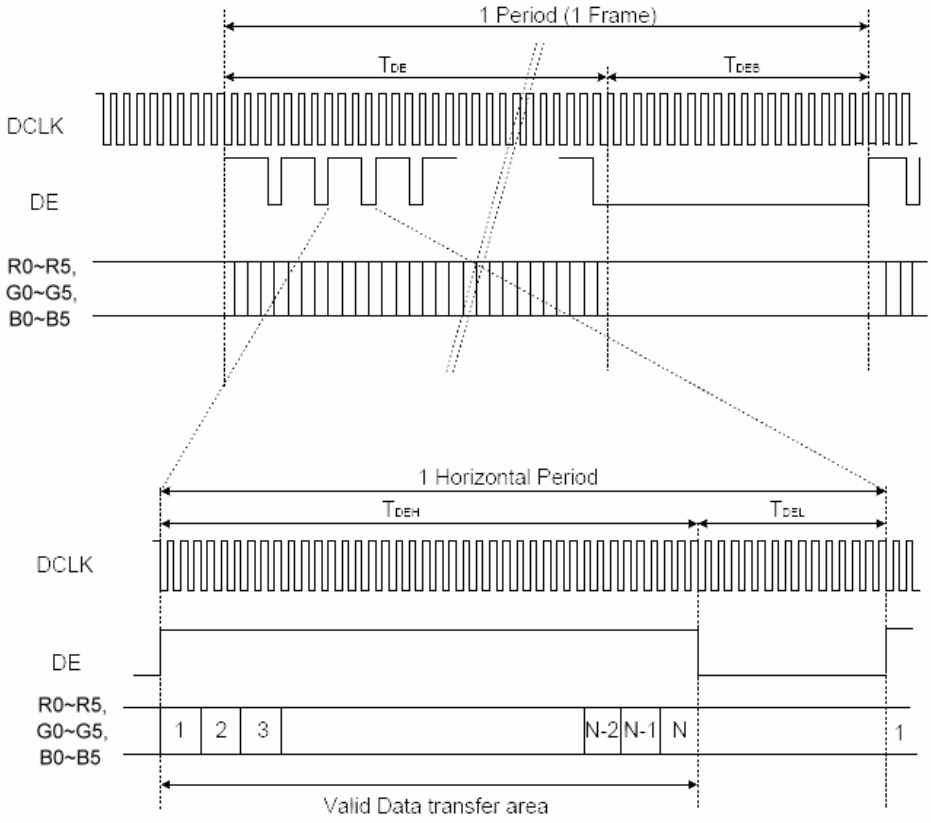

12. Optical Characteristics

The optical characteristics should be measured in a dark environment (≦ 1 lux) or equivalent state with the methods shown in Note (4).

Item		Symbol	Conditions	Min.	Typ.	Max.	Unit	Note
Contrast Ratio		CR	θ_x=0°, θ_Y =0° Viewing Normal Angle	150	(250)	-	-	(2)
Response Time		T_R		-	5	10	ms	(3)
		T_F		-	15	20	ms	
Luminance(Center)		Y		450	(500)	-	cd/m^2	(4)
Brightness uniformity		BUNI		70	(75)	-	%	(5)
Color Chromaticity	Red	Rx		0.530	0.580	0.630	-	(1),(4)
		Ry		0.310	0.360	0.410	-	
	Green	Gx		0.300	0.350	0.400	-	
		Gy		0.530	0.580	0.630	-	
	Blue	Bx		0.100	0.150	0.200	-	
		By		0.090	0.140	0.190	-	
	White	Wx		0.270	0.320	0.370	-	
		Wy		0.300	0.350	0.400	-	
Viewing Angle	Horizontal	θ_x+	CR≥10	55	(65)	-	deg.	
		θ_x-		55	(65)	-		
	Vertical	θ_Y+		45	(55)	-		
		θ_Y-		55	(65)	-		

Note (1) Definition of Viewing Angle (θx, θy):

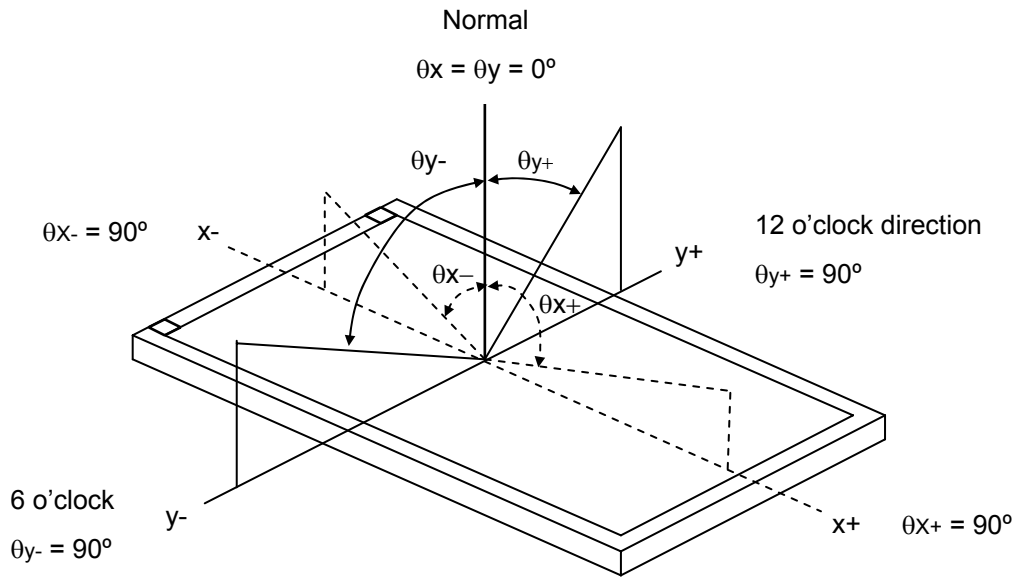

Note (2) Definition of Contrast Ratio (CR):

$$\text{Contrast ratio (CR)} = \frac{\text{Luminance measured when LCD on the "White" state}}{\text{Luminance measured when LCD on the "Black" state}}$$

Note (3) Definition of Response Time (T_R, T_F):

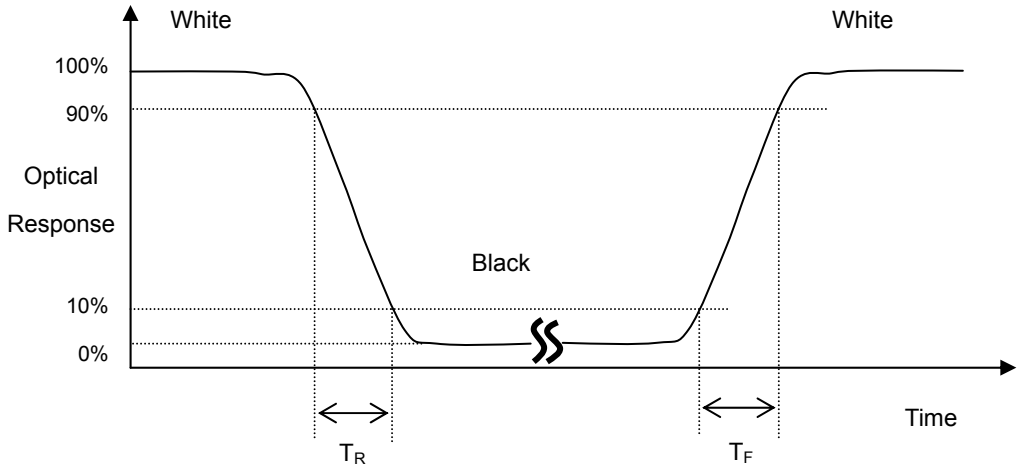

Note (4) Measurement Set-Up:

The LCD module should be stabilized at a given temperature for 30 minutes to avoid abrupt temperature change during measuring. In order to stabilize the luminance, the measurement should be executed after lighting Backlight for 30 minutes in a windless room.

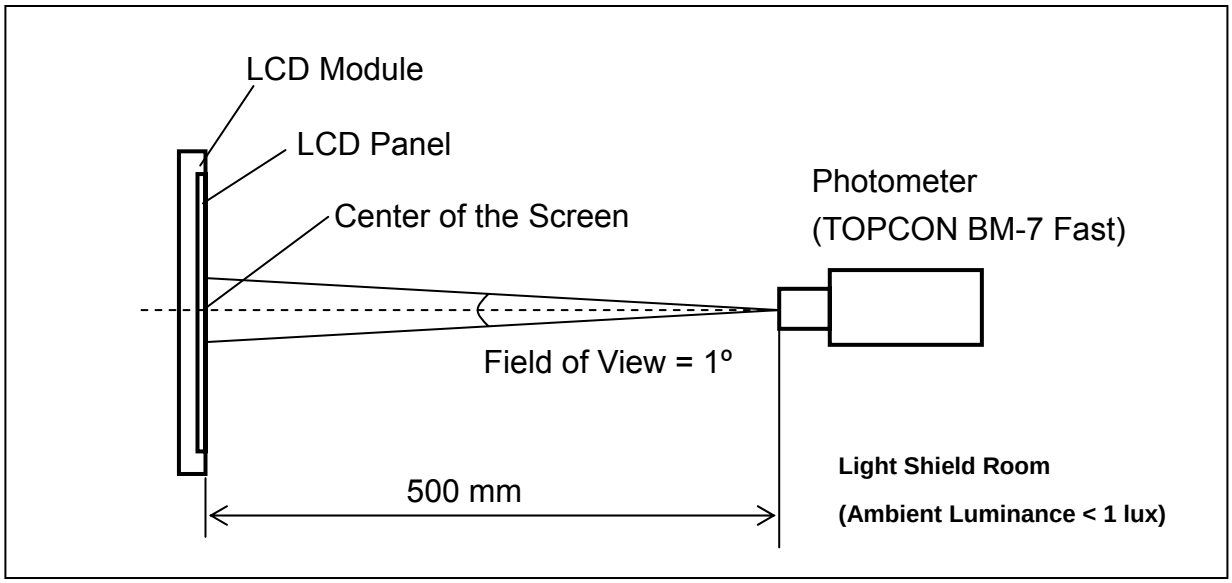

Note (5) Definition of brightness uniformity

Brightness uniformity=(Min Luminance of 9 points)/(Max Luminance of 9 points)×100%

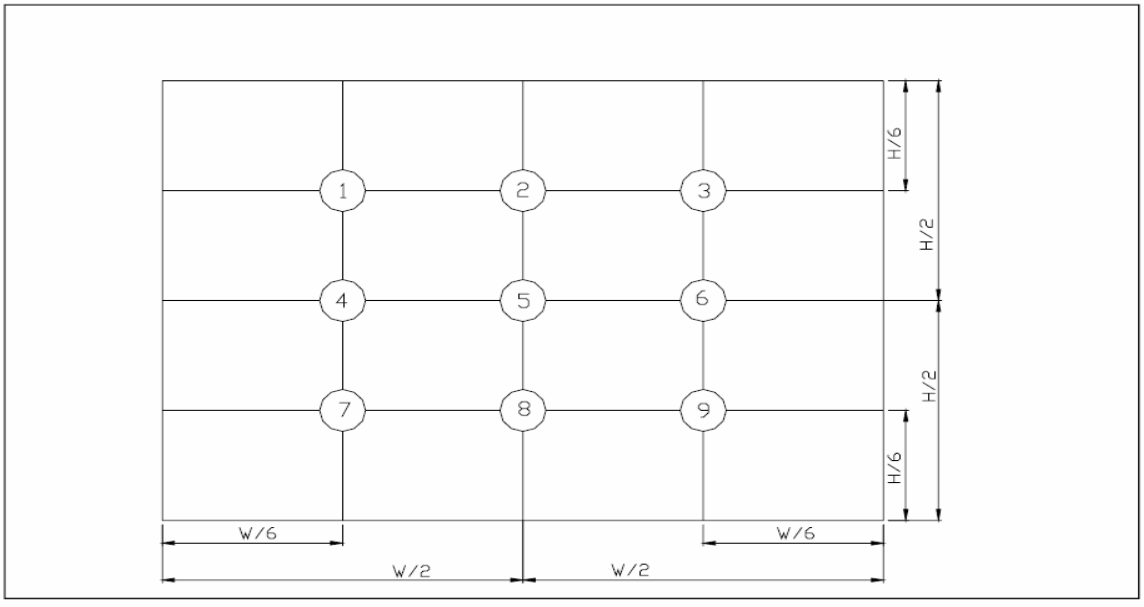

(單位 ：mm)

13. Reliability Test

No.	Test Items	Test Condition	Remark
1	High Temperature Storage Test	T_a= 80℃ 240 hours	-
2	Low Temperature Storage Test	T_a= -30℃ 240 hours	-
3	High Temperature Operation Test	T_a= 70℃ 240 hours	-
4	Low Temperature Operation Test	T_a= -20℃ 240 hours	-
5	High Temperature and High Humidity Operation Test	T_a=60℃ 90%RH 240 hours	-
6	Electro Static Discharge Test (non-operating)	-Panel Surface/Top Case : 150pF, 330Ω Air: ±15kV, Contact: ±8kV	-
7	Mechanical Shock Test (non-operating)	Half sine wave, 80G, 11ms 3 times shock of each six surfaces	-
8	Vibration Test (non-operating)	Sine wave, 10 ~ 55 ~ 10Hz, 3 axis, 2 hours/axis	-
9	Thermal Shock Test (non-operating)	-20℃(30min) ~ 70℃(30min), 100 cycles	-
10	Drop Test(with Carton)	Height: 80cm 1 corner, 3 edges, 6 surfaces	-

14. Packaging

Packing Method

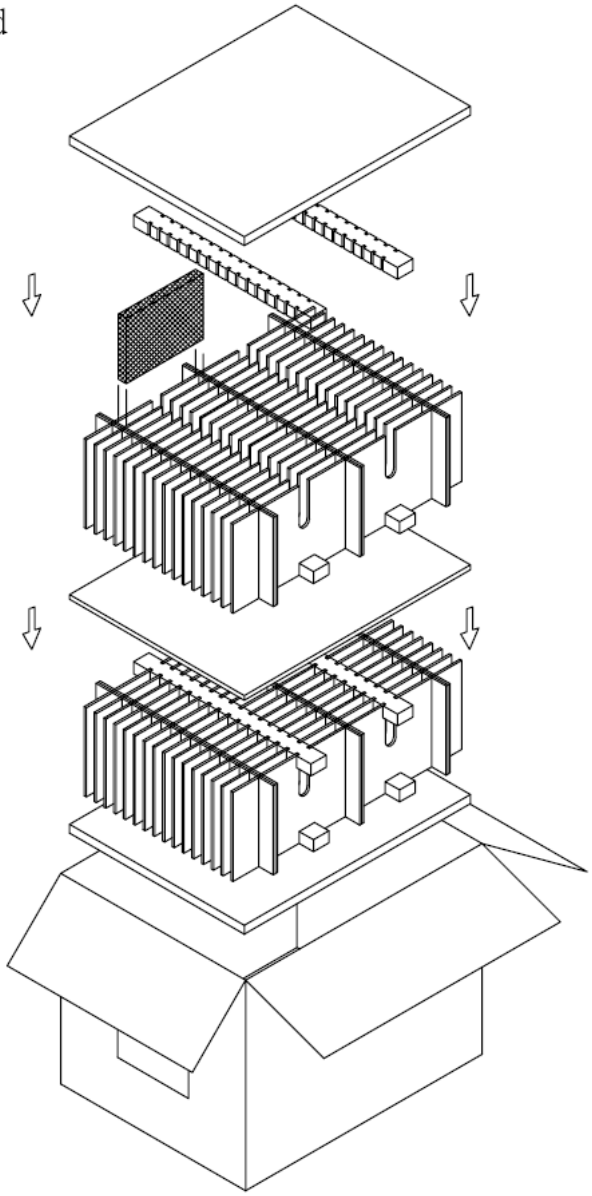

	PARTS LIST				
	ITEM	SIZE(LxWxH) unit:mm	MATERIAL	Q.T.Y	NOTE
1	STATIC SHIEDING BAGS	200.0x145.0x0.09		60	
2	PU FOAM	440.0x340.0x15.0	SPONGE	2	
3	EPE PAD	345.0x30.0x20.0	EPE	8	
4	CARD BOARD	345.0x150.0x3.5	CARTON	12	
5	CARD BOARD	450.0x150.0x3.5	CARTON	32	
6	CARD BOARD	440.0x340.0x8.0	CARTON	1	
7	EXTERNAL BOX	460.0x360.0x355.0	CARTON	1	
8	PRODUCT	166.6x109.4x10.0		60	

15. Precautions

15.1 Assembly and Handling Precautions

(1) Do not apply rough force such as bending or twisting to the module during assembly.

(2) It's recommended to assemble or to install a module into the user's system in clean working areas. The dust and oil may cause electrical short or worsen the polarizer.

(3) Don't apply pressure or impulse to the module to prevent the damage of LCD panel and Backlight.

(4) Always follow the correct power-on sequence when the LCD module is turned on. This can prevent the damage and latch-up of the CMOS LSI chips.

(5) Do not plug in or pull out the I/F connector while the module is in operation.

(6) Do not disassemble the module.

(7) Use a soft dry cloth without chemicals for cleaning, because the surface of polarizer is very soft and easily scratched.

(8) Moisture can easily penetrate into LCD module and may cause the damage during operation.

(9) High temperature or humidity may deteriorate the performance of LCD module. Please store LCD module in the specified storage conditions.

(10) When ambient temperature is lower than 10ºC, the display quality might be reduced. For example, the response time will become slow.

15.2 Safety Precautions

(1) If the liquid crystal material leaks from the panel, it should be kept away from the eyes or mouth. In case of contact with hands, skin or clothes, it has to be washed away thoroughly with soap.

(2) After the module's end of life, it is not harmful in case of normal operation and storage.

16.Outline Drawing

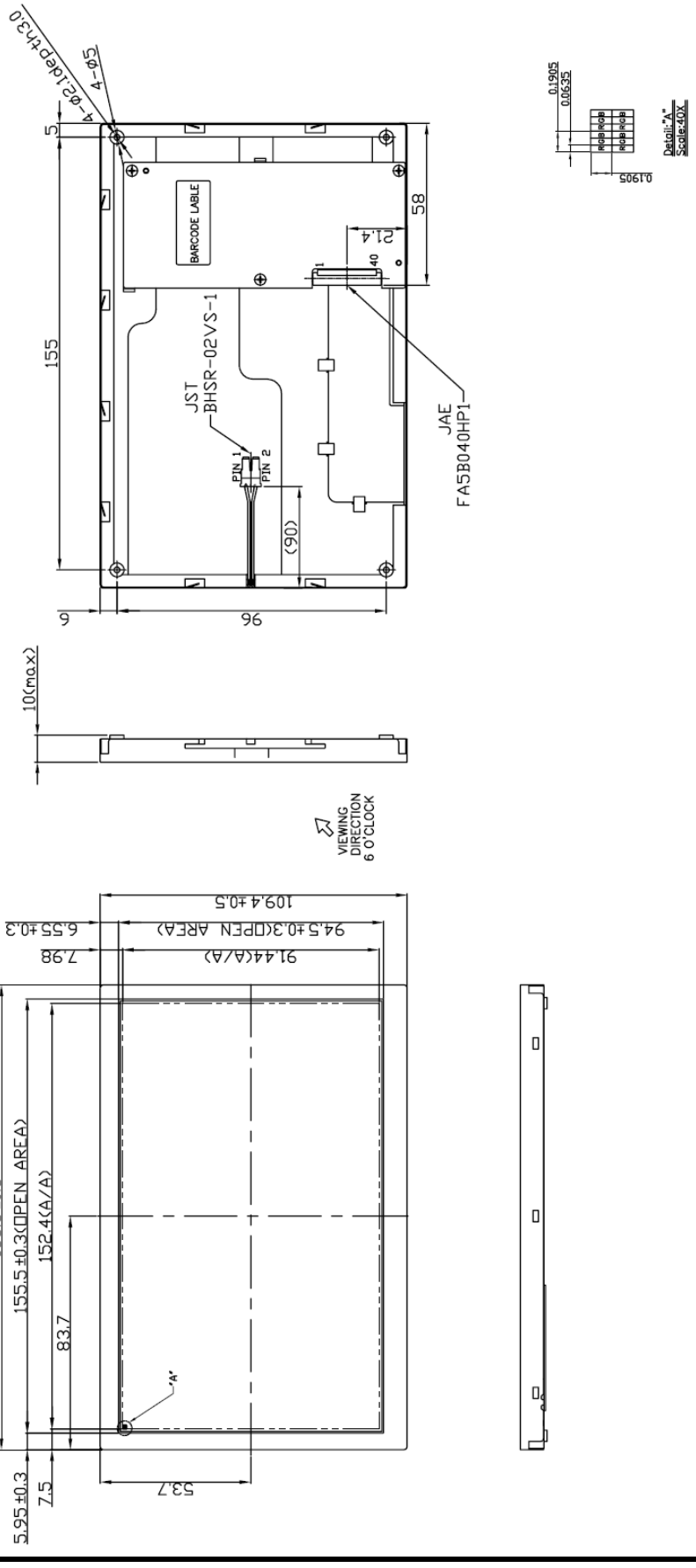

17.Definition of Labels

The bar code nameplate is pasted on each module as illustration, and its definitions are as following explanation.

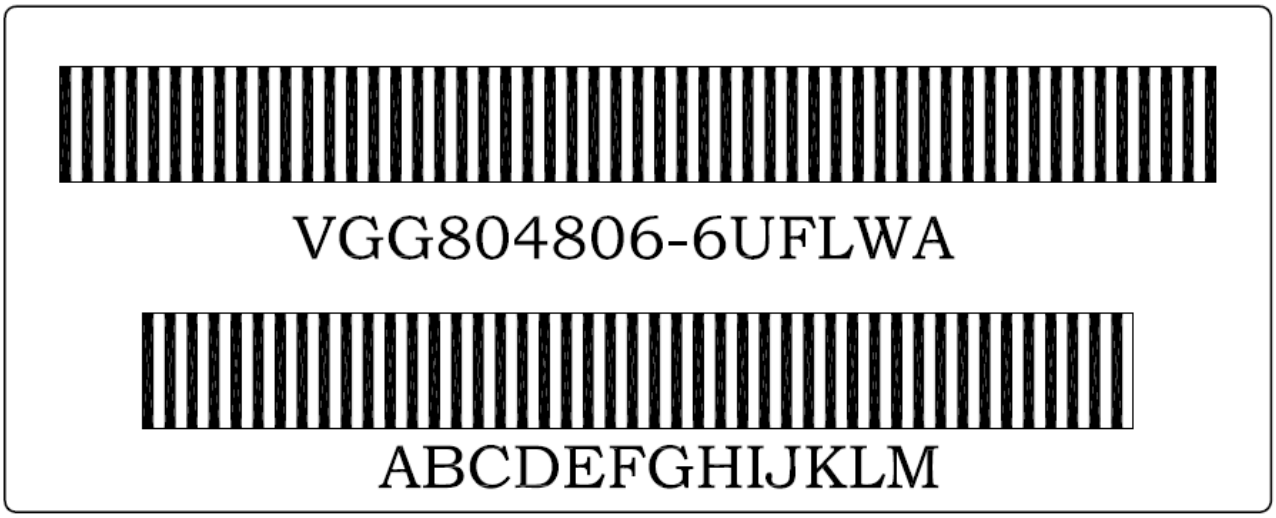

(a) Module Name: VGG804806-6UFLWA

(b) Serial ID:

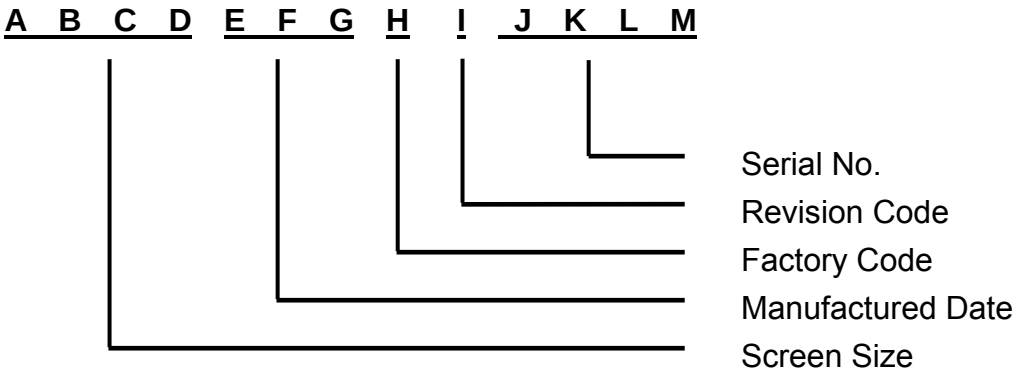

Serial ID includes the information as below:

(a) Screen size (Diagonal): Inch Code (ABCD)

3.5” → 0350

10.4” → 1040

(b) Manufactured Date: Year, Month, Day (EFG)

Year (E)

Year	2000	2001	2002	2003	2004	2005	2006	2007	2008	2009
Mark	0	1	2	3	4	5	6	7	8	9

Month (F)

Month	Jan.	Feb.	Mar.	Apr.	May	Jun.	Jul.	Aug.	Sep.	Oct.	Nov.	Dec.
Mark	1	2	3	4	5	6	7	8	9	A	B	C

Day (G)

Day	1	2	3	4	5	6	7	8	9	10	11	12	13	14	15	16
Mark	1	2	3	4	5	6	7	8	9	A	B	C	D	E	F	G
Day	17	18	19	20	21	22	23	24	25	26	27	28	29	30	31	
Mark	H	I	J	K	L	M	N	O	P	Q	R	S	T	U	V	

(c) Factory Code (H):

For EVERVISION internal use.

(d) Revision Code (I):

Cover all the change, for example: 1: Rev.1, 2: Rev.2, 3: Rev.3…etc.

(e) Serial No. (JKLM):

Manufacturing sequence of product, for example: 0001~9999.

18. Incoming Inspection Standards

18.1 The environmental condition of inspection

The environmental condition and visual inspection shall be conducted as below.

(1) Ambient temperature 25 ± 5℃

(2) Humidity: 60 ± 5% RH

(3) Viewing distance is approximately 35 ~ 40 cm

(4)Viewing angle is normal to the LCD panel as Fig _1(10°)

(5) Ambient Illumination: 300 ~ 500 Lux for external appearance inspection

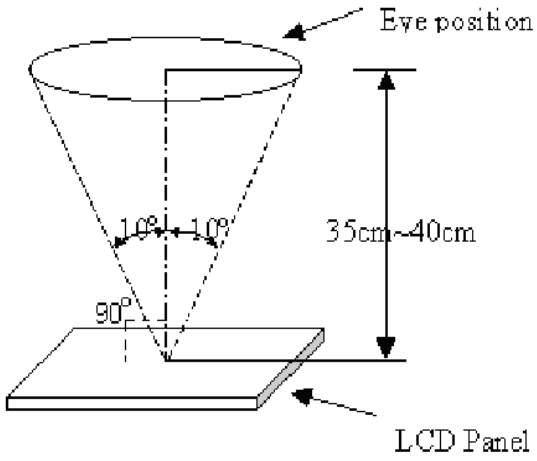

Fig _ 1

18.2 The defects classify of AQL as following:

Class of defects	AQL	Definition
Major	0.65%	It is defect that is likely to result in failure or to reduce materially the usability of the intended function.
Minor	1.5%	It is a defect that will not result in functioning problem with deviation classified.

18.3 Inspection Parameters

<table>
<tr><th colspan="2">Item</th><th colspan="4">Specification/Description</th><th>Note</th></tr>
<tr><td rowspan="2">Display</td><td rowspan="2">Function</td><td colspan="4">No Display</td><td>-</td></tr>
<tr><td colspan="4">Malfunction</td><td>-</td></tr>
<tr><td rowspan="6">Operating</td><td>Contrast ratio</td><td colspan="4">Out of Spec</td><td>-</td></tr>
<tr><td>Line defect</td><td colspan="4">No obvious Vertical and Horizontal line defect in bright , dark and colored.</td><td>-</td></tr>
<tr><td rowspan="6">Point Defect (red,green,blue,dark, white)</td><td rowspan="2">Item</td><td colspan="3">Acceptable number</td><td rowspan="6">Note: 1、4、5、6</td></tr>
<tr><td>A</td><td>B</td><td>Total</td></tr>
<tr><td>BRIGHT DOT</td><td>N≦3</td><td>N≦3</td><td rowspan="3">N≦8</td></tr>
<tr><td>DARK DOT</td><td>N≦5</td><td>N≦6</td></tr>
<tr><td>TOTAL DOT</td><td>N≦5</td><td>N≦6</td></tr>
<tr><td>TWO ADJACENT DOT</td><td colspan="3">NOT ALLOWED</td></tr>
<tr><td>THREE OR MORE ADJACENT DOT</td><td colspan="3">NOT ALLOWED</td></tr>
<tr><td rowspan="3">External Inspection (non-operating)</td><td>Scratch on the polarizer</td><td colspan="4"><table><tr><td>L(mm)</td><td>W(mm)</td><td>Acceptable number</td></tr><tr><td>L≦2.5</td><td>W≦0.1</td><td>4</td></tr><tr><td>L＞2.5</td><td>W＞0.1</td><td>0</td></tr></table></td><td>Note:2</td></tr>
<tr><td>Dent or bubble on the polarizer</td><td colspan="4"><table><tr><td>Dimension(mm)</td><td>Acceptable number</td></tr><tr><td>D≦0.5</td><td>4</td></tr><tr><td>D≦0.15</td><td>Disregard</td></tr></table></td><td>Note:3</td></tr>
<tr><td>Foreign material on the polarizer</td><td colspan="4"><table><tr><td>Dimension(mm)</td><td>Acceptable number</td></tr><tr><td>D≦0.5</td><td>4</td></tr><tr><td>D≦0.15</td><td>Disregard</td></tr></table></td><td>Note:3</td></tr>
</table>

Item		Specification/Description			Note
Touch Panel	Scratch	L(mm)	W(mm)	Acceptable number	Note:2
		L≦10	W＜0.05	Disregard	
			0.05≦W＜0.1	N≦4	
			W≧0.1	0	
	Foreign Materials (Linear shape)	L≦10	W＜0.05	Disregard	Note:2
			0.05≦W＜0.1	N≦3	
			W≧0.1	0	
	Foreign Materials (Circular shape)	Dimension(mm)		Acceptable number	Note:3
		D≦0.25		Disregard	
		0.25＜D≦0.5		N≦6	
		D＞0.5		0	
	Glass chipping	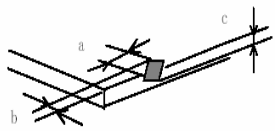		a≦5mm b≦3mm c≦t (t：Glass think)	Note:7
		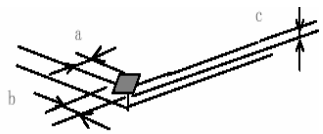		a≦3mm b≦3mm c≦t (t：Glass think)	Note:7
	Newton-ring	(In case of doubtful situations) Observe on 60° from the product surface under a while Fluorescent lamp(3-wavelength lamp). 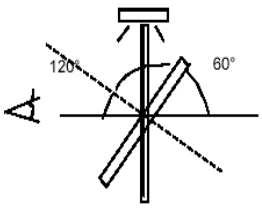		Average diameter ≦1/3 Touch Panel area Disregard.	Note:7

Note1. The definition of dot defect : The dot defect was judged after repair and the size of a defective dot over 1/2 of whole dot is regarded as one defective dot.

Note2.

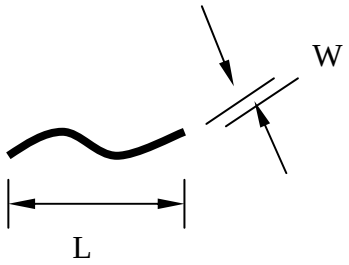

Note3. D：Diameter D=(a+b)/2

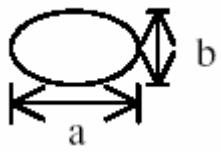

Note4. Bright dot is defined through 6% transmission ND Filter as following.

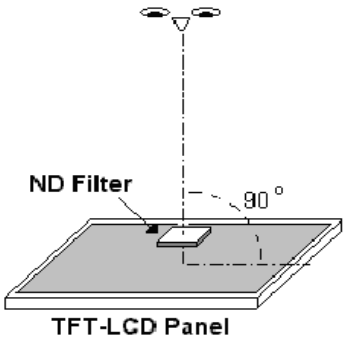

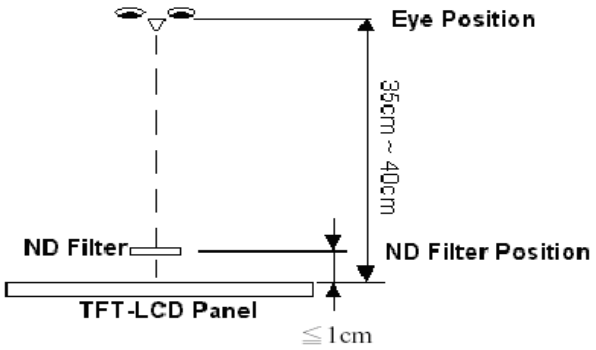

Note5. ADJACENT DOT

Note6.

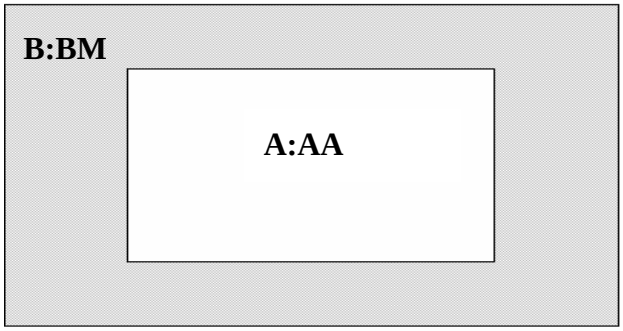

Note7.

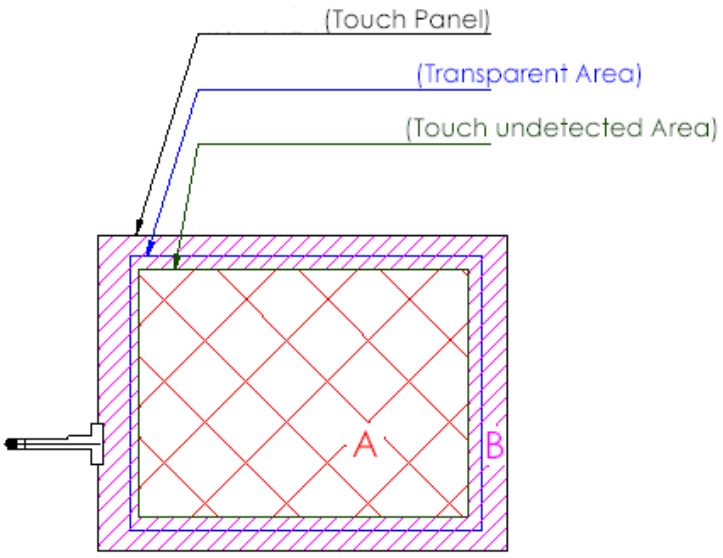

A area : Without any defect point effect on normal operation.

B area : None-specify

18.4 Handling of LCM

(1)Don't give external shock.

(2)Don't apply excessive force on the surface.

(3)Liquid in LCD is hazardous substance. Must not lick and swallow. when the liquid is attach to your hand, skin, cloth etc. Wash it out thoroughly and immediately.

(4)Don't operate it above the absolute maximum rating.

(5)Don't disassemble the LCM.