PRODUCT SPECIFICATION

Model No.: OL-5016ED1C-B

Descriptions:
■Dice material: GaP
■Emitting Color: Orange
■Device Outline: Φ5mm round blinking flash type.
■Lens Type: Red diffused.

CUSTOMER APPROVED SIGNATURES	APPROVED BY	CHECKED BY	PREPARED BY

Model. No.	OL-5016ED1C-B
Rev.	A

Model No. : OL-5016ED1C-B

■ · Features

1. Low power consumption.
2. High efficiency.
3. General purpose leads.
4. High intensity.
5. RoHs compliant.

■ Package configuration

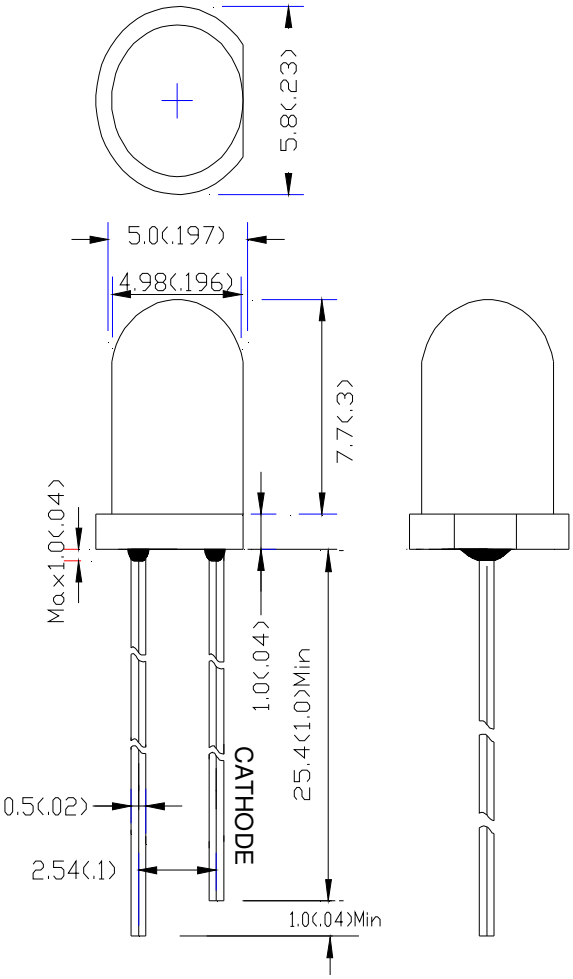

Notes:

1. All dimensions are millimeters (inches)
2. Tolerance is ±0.25mm(.010”) unless otherwise noted.
3. The specifications, characteristics and technical data described in the datasheet are subject to change without prior no

opto devices

Model. No.	OL-5016ED1C-B
Rev.	A

Model No. : OL-5016ED1C-B

■ Absolute Maximun Ratings(Ta=25° C)

Parameter	MAX.	Unit
Power Dissipation	75	mW
Peak Forward Current (1/10 Duty Cycle, 0.1ms Pulse Width)	100	mA
Continuous Forward Current	30	mA
Derating Linear From 50℃	0,4	mA/℃
Reverse Voltage	5	V
Operating Temperature Range	-40℃ to +85℃	
Storage Temperature Range	-40℃ to +100℃	
Lead Soldering Temperature[4mm(.157") From Body]	260℃ for 5 Seconds	

■ Typical Electrical &Optical Charcteristics(Ta=25ºC)

Parameter	Symbol	Min.	Typ.	Max.	Unit	Test Condition
Luminous Intensity	I_V	–	30	–	mcd	IF=20mA
Viewing Angle	$2\theta_{1/2}$	–	30	–	Deg	
Peak Emission Wavelength	λp	–	625	–	nm	
Dominant Wavelength	λd	618	623	628	nm	
Spectral Line Half-Width	△λ	–	30	–	nm	
Forward Voltage	V_F	5	7	–	V	
Blinking Frequency	Fblk	2	2,4	2,8	Hz	VDD=5V
Reverse Current	I_R			10	μA	VR=5V

Note:

1.Luminous Intensity is based on our standards.

2.Pay attention about static for Indium chip.

Model No. : OL-5016ED1C-B

■ Typical Eletrical/Optical Characteristics Curves(Ta=25° C Unless Otherwise Noted)

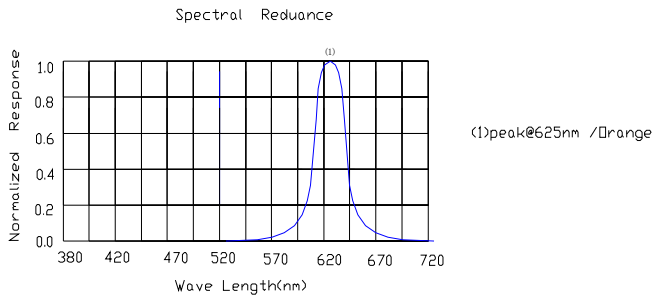

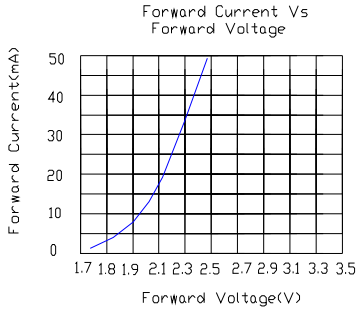

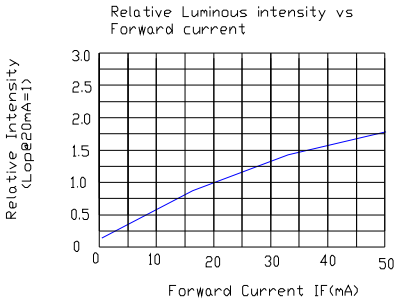

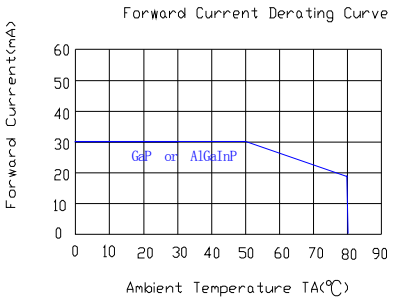

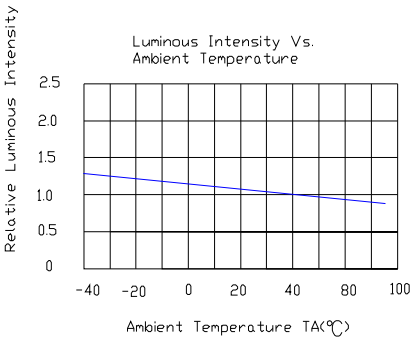

Radiation pattern.

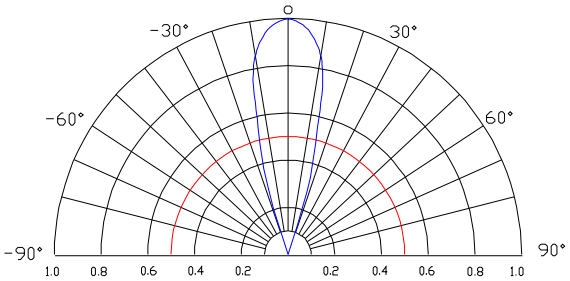

Relative Lumionous Intensity(LOP @max=1)

Model. No.	OL-5016ED1C-B
Rev.	A

Model No. : OL-5016ED1C-B

- ■ **LAMP PACKING.**

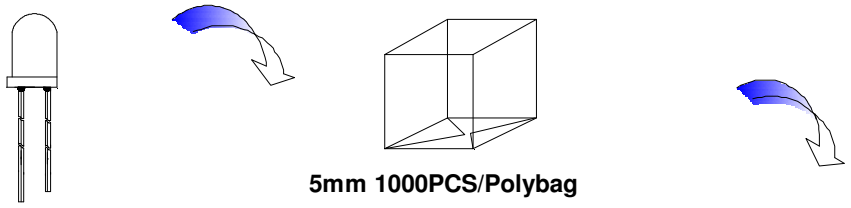

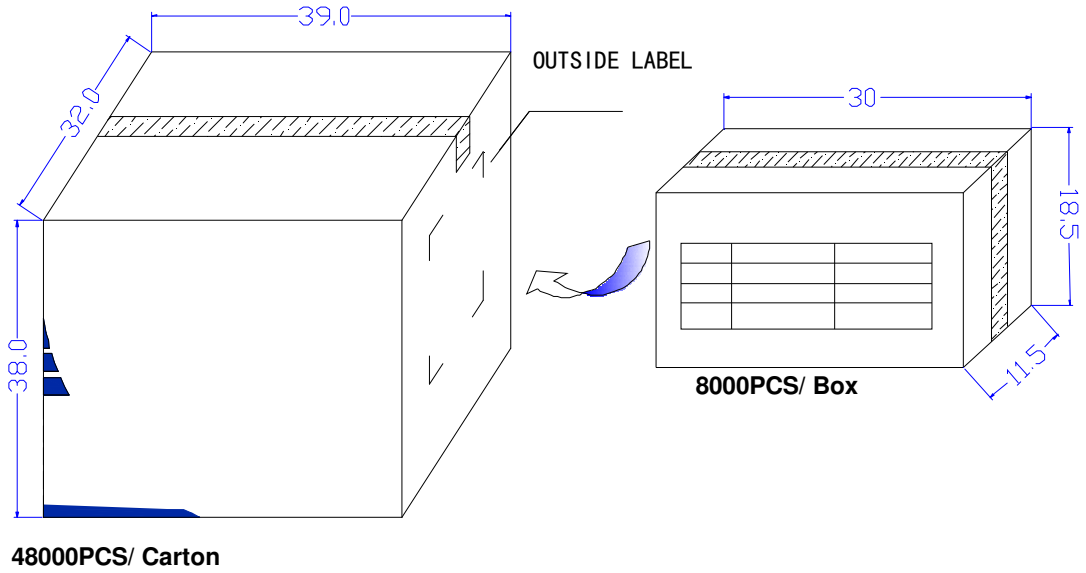

Note: The specifications are subject to change without notice. Please contact us for updated information.