LM2594

0.5 A, Step-Down Switching Regulator

The LM2594 regulator is monolithic integrated circuit ideally suited for easy and convenient design of a step−down switching regulator (buck converter). It is capable of driving a 0.5 A load with excellent line and load regulation. This device is available in adjustable output version. It is internally compensated to minimize the number of external components to simplify the power supply design.

Since LM2594 converter is a switch−mode power supply, its efficiency is significantly higher in comparison with popular three−terminal linear regulators, especially with higher input voltages. The LM2594 operates at a switching frequency of 150 kHz thus allowing smaller sized filter components than what would be needed with lower frequency switching regulators. Available in a standard 8−Lead PDIP and 8−Lead Surface Mount packages.

The other features include a guaranteed ±4% tolerance on output voltage within specified input voltages and output load conditions, and ±15% on the oscillator frequency. External shutdown is included, featuring 50 μA (typical) standby current. Self protection features include switch cycle−by−cycle current limit for the output switch, as well as thermal shutdown for complete protection under fault conditions.

Features

- Adjustable Output Voltage Range 1.23 V – 37 V
- Guaranteed 0.5 A Output Load Current
- Wide Input Voltage Range up to 40 V
- 150 kHz Fixed Frequency Internal Oscillator
- TTL Shutdown Capability
- Low Power Standby Mode, typ 50 μA
- Thermal Shutdown and Current Limit Protection
- Internal Loop Compensation
- Moisture Sensitivity Level (MSL) Equals 1
- These are Pb−Free Devices

Applications

- Simple High−Efficiency Step−Down (Buck) Regulator
- Efficient Pre−Regulator for Linear Regulators
- On−Card Switching Regulators
- Positive to Negative Converter (Buck−Boost)
- Negative Step−Up Converters
- Power Supply for Battery Chargers

ON Semiconductor®

http://onsemi.com

MARKING DIAGRAMS

SOIC−8
D SUFFIX
CASE 751

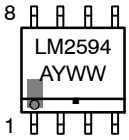

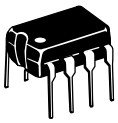

PDIP−8
N SUFFIX
CASE 626

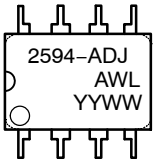

A	= Assembly Location
WL	= Wafer Lot
YY	= Year
WW	= Work Week
G or ▪	= Pb−Free Package

PIN CONNECTIONS

SOIC−8

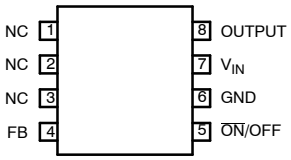

(Top View)

PDIP−8

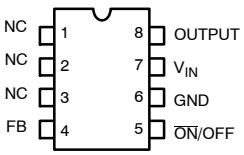

(Top View)

ORDERING INFORMATION

See detailed ordering and shipping information in the package dimensions section on page 23 of this data sheet.

© Semiconductor Components Industries, LLC, 2009

January, 2009 − Rev. 0

Publication Order Number:
LM2594/D

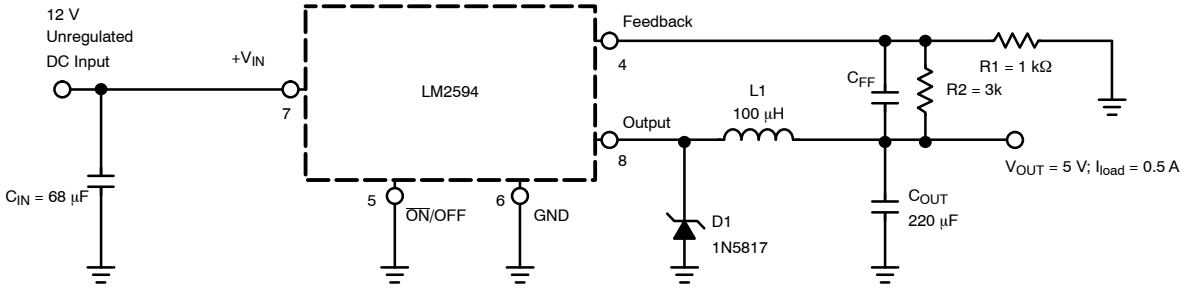

Figure 1. Typical Application

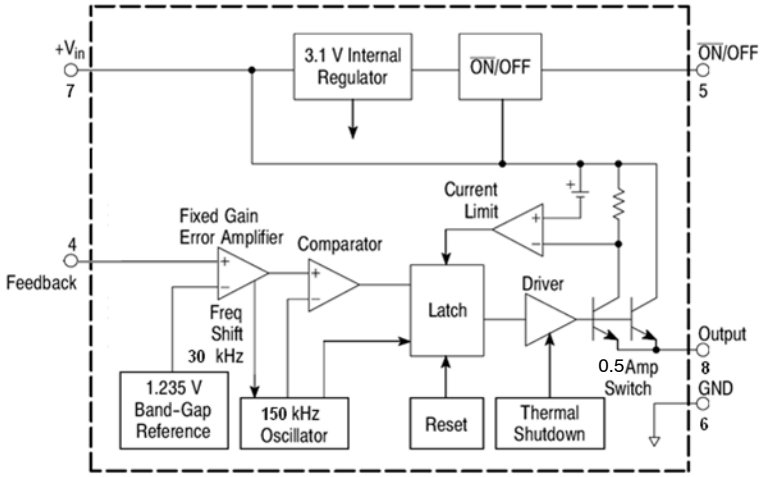

Figure 2. Representative Block Diagram

PIN FUNCTION DESCRIPTION

Pin No.	Symbol	Description (Refer to Figure 1)
1 – 3	NC	Not Connected
4	FB	This pin is the direct input of the error amplifier and the resistor network R2, R1 is connected externally to allow programming of the output voltage.
5	$\overline{ON}$/OFF	Allows the switching regulator circuit to be shut down using logic levels, thus dropping the total input supply current to approximately 50 μA. The threshold voltage is typical. 1.6 V. Applying a voltage above this value (up to V_{IN}) shuts the regulator off. If the voltage applied to this pin is lower than 1.6 V or if this pin is left open, the regulator will be in the “on” condition.
6	GND	Circuit ground pin. See the information about the printed circuit board layout.
7	$+V_{IN}$	Positive input supply for LM2594 step−down switching regulator. In order to minimize voltage transients and to supply the switching currents needed by the regulator, a suitable input bypass capacitor must be present (C_{IN} in Figure 1)
8	OUTPUT	Emitter of the internal switch. The saturation voltage Vsat of the output switch is typically 1 V. It should be kept in mind that PCB area connected to this pin should be kept to a minimum in order to minimize coupling to sensitive circuitry

MAXIMUM RATINGS

Symbol	Rating	Value	Unit
V_{in}	Maximum Supply Voltage	45	V
$\overline{ON}$/OFF	$\overline{ON}$/OFF Pin Input Voltage	$-0.3\ V \le V \le +V_{in}$	V
V_{out}	Output Voltage to Ground (Steady−State)	−1.0	V
	Power Dissipation		
P_D	8−Lead DIP	Internally Limited	W
$R_{\theta JA}$	Thermal Resistance, Junction−to−Ambient	100	°C/W
$R_{\theta JC}$	Thermal Resistance, Junction−to−Case	5.0	°C/W
	Power Dissipation		
P_D	8−Lead Surface Mount	Internally Limited	W
$R_{\theta JA}$	Thermal Resistance, Junction−to−Ambient	175	°C/W
T_{stg}	Storage Temperature Range	−65 to +150	°C
–	Minimum ESD Rating (Human Body Model: C = 100 pF, R = 1.5 kΩ)	2.0	kV
–	Lead Temperature (Soldering, 10 seconds)	260	°C
T_J	Maximum Junction Temperature	150	°C

Stresses exceeding Maximum Ratings may damage the device. Maximum Ratings are stress ratings only. Functional operation above the Recommended Operating Conditions is not implied. Extended exposure to stresses above the Recommended Operating Conditions may affect device reliability.

OPERATING RATINGS (Operating Ratings indicate conditions for which the device is intended to be functional, but do not guarantee specific performance limits. For guaranteed specifications and test conditions, see the Electrical Characteristics table)

Symbol	Rating	Value	Unit
T_J	Operating Temperature Range	−40 to +125	°C
V_{IN}	Supply Voltage	4.5 V to 40 V	V

SYSTEM PARAMETERS

ELECTRICAL CHARACTERISTICS Specifications with standard type face are for T_J = 25°C, and those with boldface type apply over full Operating Temperature Range −40°C to +125°C

Characteristics	Symbol	Min	Typ	Max	Unit
LM2594 (Note 1, Test Circuit Figure 16)					
Feedback Voltage (V_{in} = 12 V, I_{Load} = 0.1 A, V_{out} = 5.0 V,)	V_{FB_nom}		1.23		V
Feedback Voltage (8.0 V ≤ V_{in} ≤ 40 V, 0.1 A ≤ I_{Load} ≤ 0.5 A, V_{out} = 5.0 V)	V_{FB}	1.193 **1.18**		1.267 **1.28**	V
Efficiency (V_{in} = 12 V, I_{Load} = 0.5 A, V_{out} = 5.0 V)	η	–	80		%
Characteristics	**Symbol**	**Min**	**Typ**	**Max**	**Unit**
Feedback Bias Current (V_{out} = 5.0 V)	I_b		25	100 **200**	nA
Oscillator Frequency (Note 2)	f_{osc}	135 **120**	150	165 **180**	kHz
Saturation Voltage (I_{out} = 0.5 A, Notes 3 and 4)	V_{sat}		1.0	1.2 **1.4**	V
Max Duty Cycle “ON” (Note 4)	DC		95		%
Current Limit (Peak Current, Notes 3 and 4)	I_{CL}	0.7 **0.65**	1.0	1.6 **1.8**	A
Output Leakage Current (Notes 5 and 6) Output = 0 V Output = −1.0 V	I_L		 0.5 13	 2.0 30	mA
Quiescent Current (Note 5)	I_Q		5.0	10	mA
Standby Quiescent Current ($\overline{ON}$/OFF Pin = 5.0 V (“OFF”)) (Note 6)	I_{stby}		50	200 **250**	μA
$\overline{ON}$/OFF PIN LOGIC INPUT					
Threshold Voltage			1.6		V
V_{out} = 0 V (Regulator OFF)	V_{IH}	2.2 **2.4**			V
V_{out} = Nominal Output Voltage (Regulator ON)	V_{IL}			1.0 **0.8**	V
$\overline{ON}$/OFF Pin Input Current					
$\overline{ON}$/OFF Pin = 5.0 V (Regulator OFF)	I_{IH}	–	15	30	μA
$\overline{ON}$/OFF Pin = 0 V (regulator ON)	I_{IL}	–	0.01	5.0	μA

1. External components such as the catch diode, inductor, input and output capacitors can affect switching regulator system performance. When the LM2594 is used as shown in the Figure 16 test circuit, system performance will be as shown in system parameters section.
2. The oscillator frequency reduces to approximately 30 kHz in the event of an output short or an overload which causes the regulated output voltage to drop approximately 40% from the nominal output voltage. This self protection feature lowers the average dissipation of the IC by lowering the minimum duty cycle from 5% down to approximately 2%.
3. No diode, inductor or capacitor connected to output (Pin 8) sourcing the current.
4. Feedback (Pin 4) removed from output and connected to 0 V.
5. Feedback (Pin 4) removed from output and connected to +12 V to force the output transistor “off”.
6. V_{in} = 40 V.

TYPICAL PERFORMANCE CHARACTERISTICS (Circuit of Figure 16)

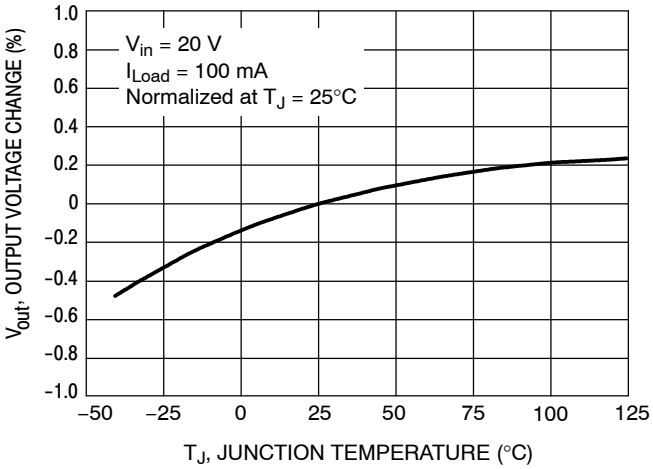

Figure 3. Normalized Output Voltage

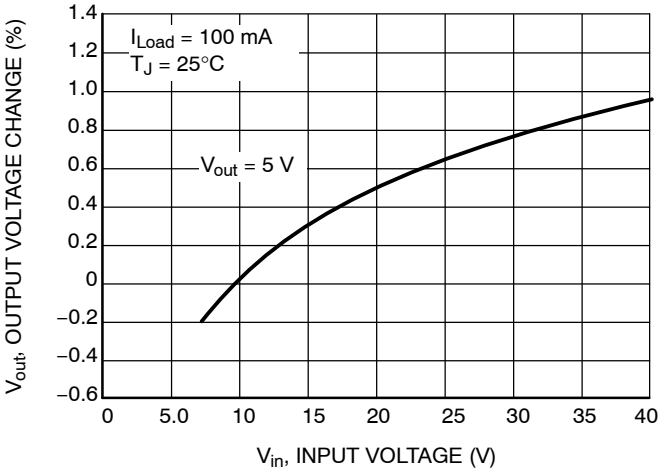

Figure 4. Line Regulation

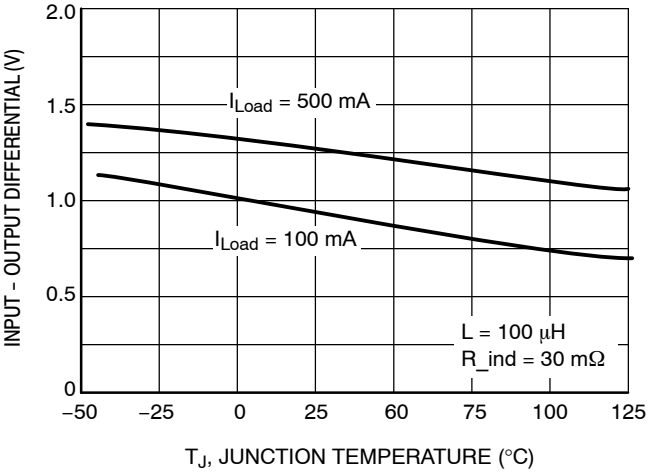

Figure 5. Dropout Voltage

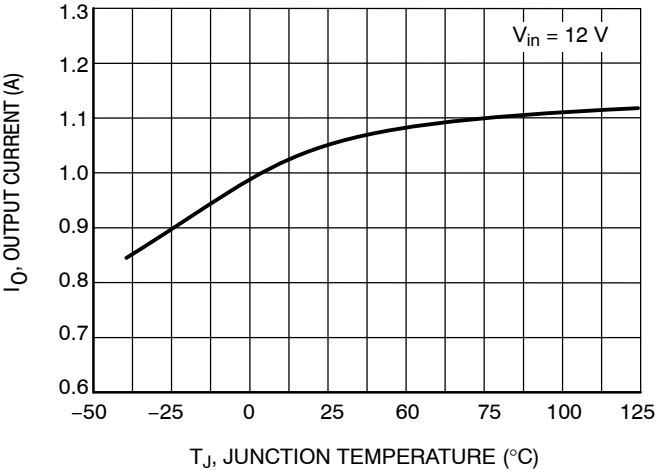

Figure 6. Current Limit

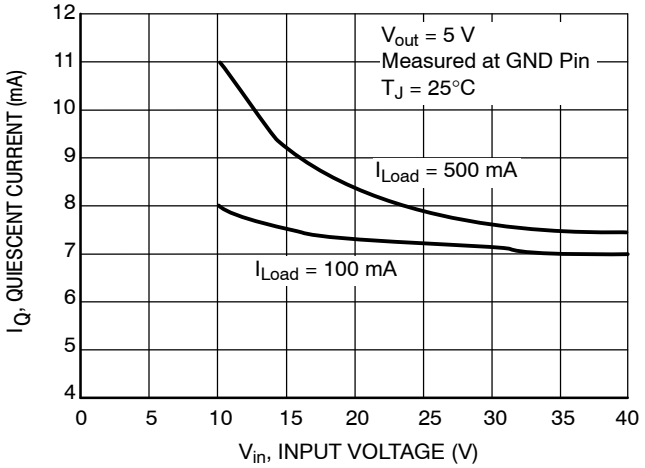

Figure 7. Quiescent Current

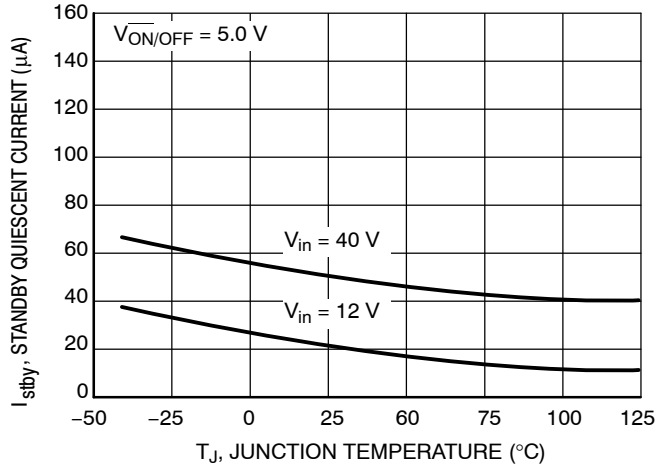

Figure 8. Standby Quiescent Current

TYPICAL PERFORMANCE CHARACTERISTICS (Circuit of Figure 16)

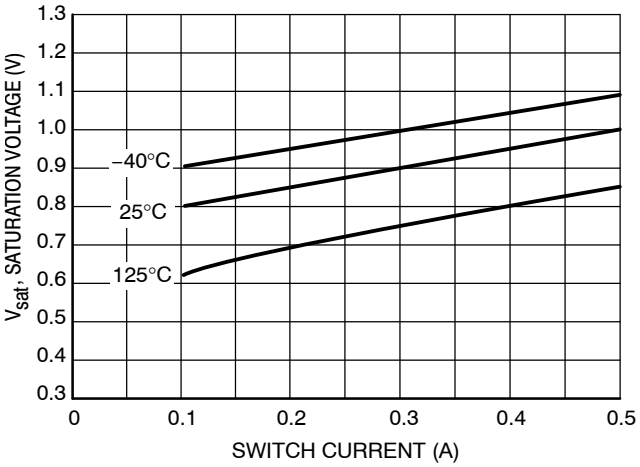

Figure 9. Switch Saturation Voltage

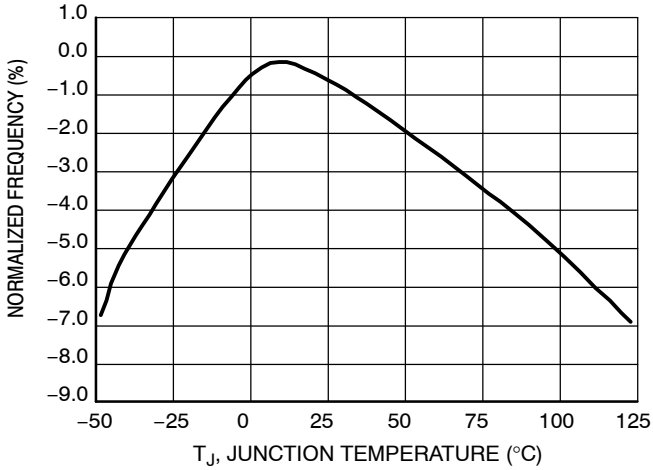

Figure 10. Switching Frequency

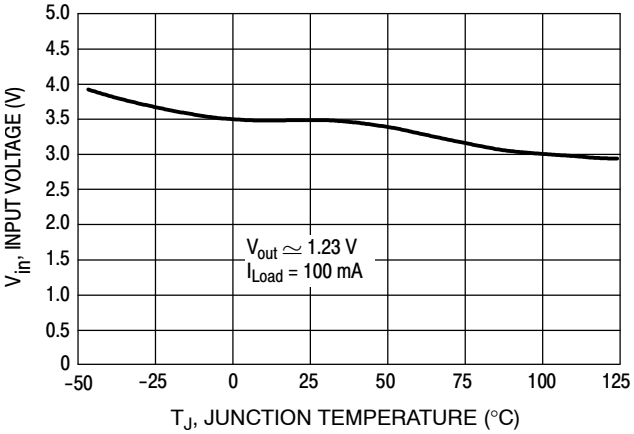

Figure 11. Minimum Supply Operating Voltage

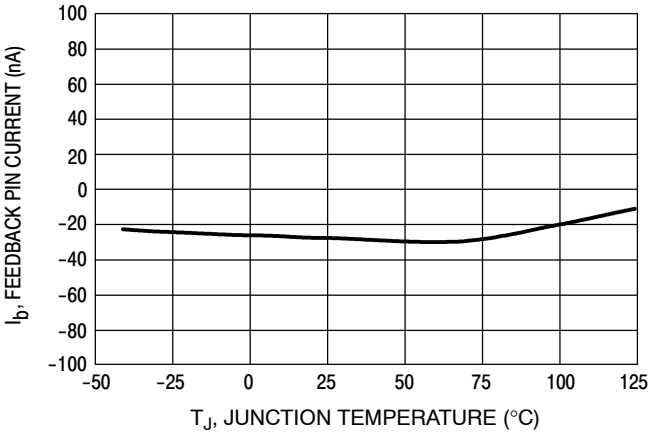

Figure 12. Feedback Pin Current

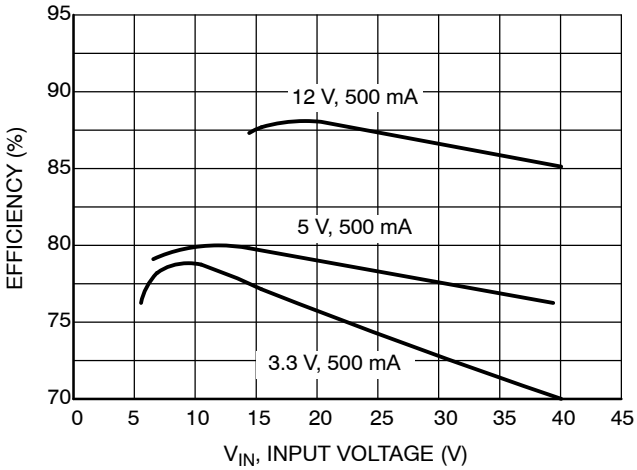

Figure 13. Efficiency

TYPICAL PERFORMANCE CHARACTERISTICS (Circuit of Figure 16)

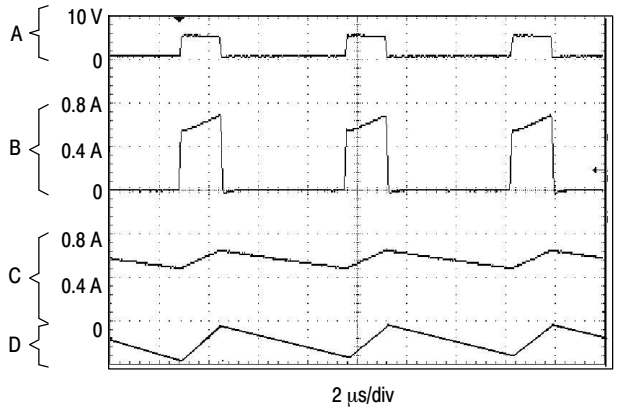

Figure 14. Switching Waveforms

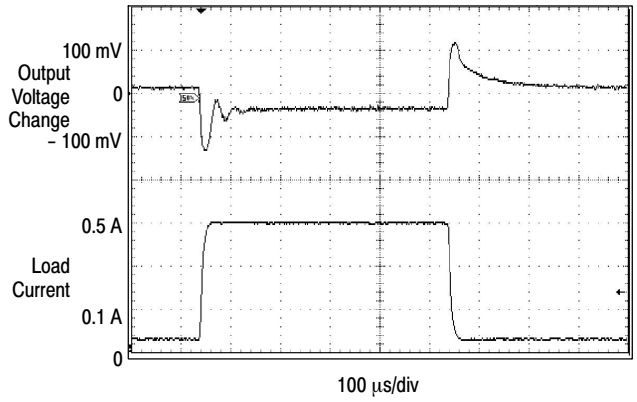

Figure 15. Load Transient Response

V_{out} = 5 V
A: Output Pin Voltage, 10 V/div
B: Switch Current, 0.4 A/div
C: Inductor Current, 0.4 A/div, AC−Coupled
D: Output Ripple Voltage, 50 mV/div, AC−Coupled

Horizontal Time Base: 2.0 μs/div

Adjustable Output Voltage Versions

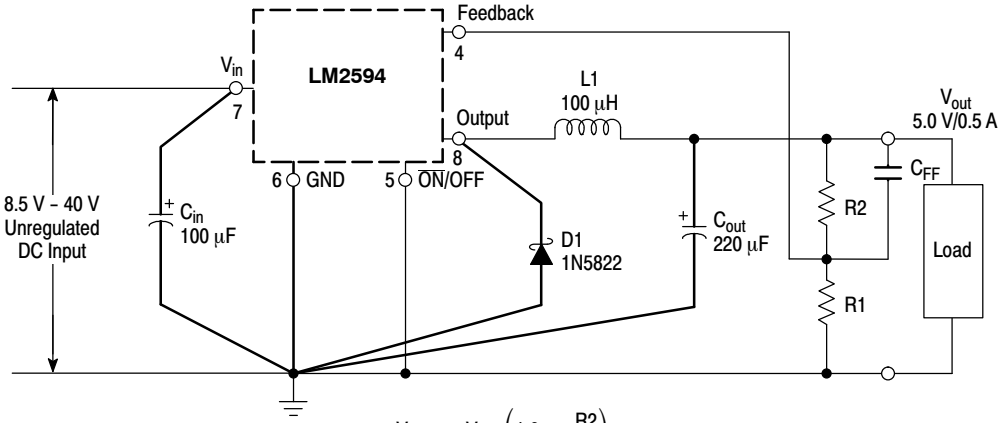

$$V_{out} = V_{ref}\left(1.0 + \frac{R2}{R1}\right)$$

$$R2 = R1\left(\frac{V_{out}}{V_{ref}}\ 1.0\right)$$

Where V_{ref} = 1.23 V, R1 between 1.0 k and 5.0 k

Figure 16. Typical Test Circuit

PCB LAYOUT GUIDELINES

As in any switching regulator, the layout of the printed circuit board is very important. Rapidly switching currents associated with wiring inductance, stray capacitance and parasitic inductance of the printed circuit board traces can generate voltage transients which can generate electromagnetic interferences (EMI) and affect the desired operation. As indicated in the Figure 16, to minimize inductance and ground loops, the length of the leads indicated by heavy lines should be kept as short as possible.

For best results, single−point grounding (as indicated) or ground plane construction should be used.

On the other hand, the PCB area connected to the Pin 2 (emitter of the internal switch) of the LM2594 should be kept to a minimum in order to minimize coupling to sensitive circuitry.

Another sensitive part of the circuit is the feedback. It is important to keep the sensitive feedback wiring short. To assure this, physically locate the programming resistors near to the regulator, when using the adjustable version of the LM2594 regulator.

DESIGN PROCEDURE

Buck Converter Basics

The LM2594 is a “Buck” or Step−Down Converter which is the most elementary forward−mode converter. Its basic schematic can be seen in Figure 17.

The operation of this regulator topology has two distinct time periods. The first one occurs when the series switch is on, the input voltage is connected to the input of the inductor.

The output of the inductor is the output voltage, and the rectifier (or catch diode) is reverse biased. During this period, since there is a constant voltage source connected across the inductor, the inductor current begins to linearly ramp upwards, as described by the following equation:

$$I_{L(on)} = \frac{(V_{IN} - V_{OUT})t_{on}}{L}$$

During this “on” period, energy is stored within the core material in the form of magnetic flux. If the inductor is properly designed, there is sufficient energy stored to carry the requirements of the load during the “off” period.

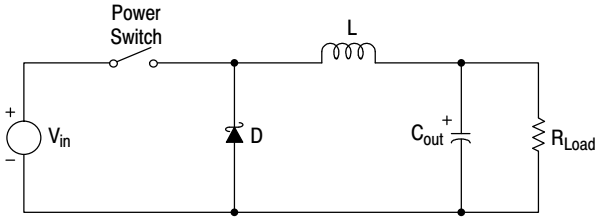

Figure 17. Basic Buck Converter

The next period is the “off” period of the power switch. When the power switch turns off, the voltage across the inductor reverses its polarity and is clamped at one diode voltage drop below ground by the catch diode. The current now flows through the catch diode thus maintaining the load current loop. This removes the stored energy from the inductor. The inductor current during this time is:

$$I_{L(off)} = \frac{(V_{OUT} - V_D)t_{off}}{L}$$

This period ends when the power switch is once again turned on. Regulation of the converter is accomplished by varying the duty cycle of the power switch. It is possible to describe the duty cycle as follows:

$$d = \frac{t_{on}}{T}, \text{ where T is the period of switching.}$$

For the buck converter with ideal components, the duty cycle can also be described as:

$$d = \frac{V_{out}}{V_{in}}$$

Figure 18 shows the buck converter, idealized waveforms of the catch diode voltage and the inductor current.

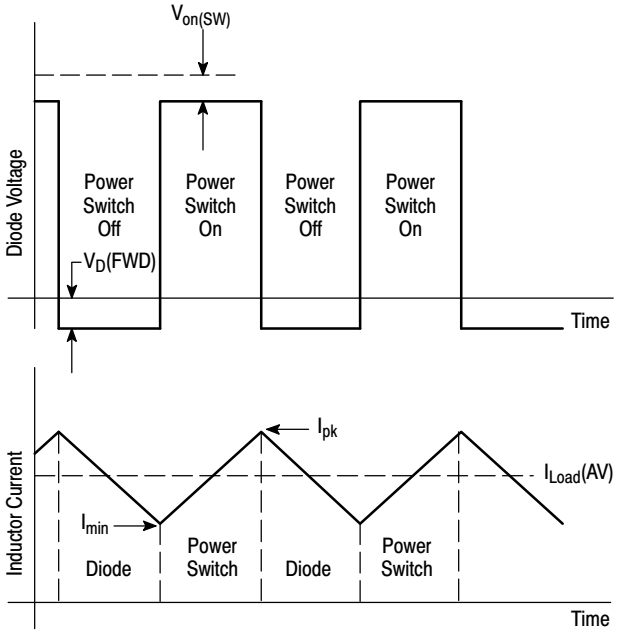

Figure 18. Buck Converter Idealized Waveforms

PROCEDURE (ADJUSTABLE OUTPUT VERSION: LM2594)

Procedure	Example
Given Parameters: V_{out} = Regulated Output Voltage $V_{in(max)}$ = Maximum DC Input Voltage $I_{Load(max)}$ = Maximum Load Current	**Given Parameters:** V_{out} = 5.0 V $V_{in(max)}$ = 12 V $I_{Load(max)}$ = 0.5 A
1. Programming Output Voltage To select the right programming resistor R1 and R2 value (see Figure 1) use the following formula: $V_{out} = V_{ref}\left(1.0 + \frac{R2}{R1}\right)$ where V_{ref} = 1.23 V Resistor R1 can be between 1.0 k and 5.0 kΩ. (For best temperature coefficient and stability with time, use 1% metal film resistors). $R2 = R1\left(\frac{V_{out}}{V_{ref}} - 1.0\right)$	**1. Programming Output Voltage** (selecting R1 and R2) Select R1 and R2: $V_{out} = 1.23\left(1.0 + \frac{R2}{R1}\right)$ Select R1 = 1.0 kΩ $R2 = R1\left(\frac{V_{out}}{V_{ref}} - 1.0\right) = \left(\frac{5\ V}{1.23\ V} - 1.0\right)$ R2 = 3.0 kΩ, choose a 3.0k metal film resistor.
2. Input Capacitor Selection (C_{in}) To prevent large voltage transients from appearing at the input and for stable operation of the converter, an aluminium or tantalum electrolytic bypass capacitor is needed between the input pin $+V_{in}$ and ground pin GND This capacitor should be located close to the IC using short leads. This capacitor should have a low ESR (Equivalent Series Resistance) value. For additional information see input capacitor section in the “Application Information” section of this data sheet.	**2. Input Capacitor Selection (C_{in})** A 68 μF, 50 V aluminium electrolytic capacitor located near the input and ground pin provides sufficient bypassing.
3. Catch Diode Selection (D1) **A.** Since the diode maximum peak current exceeds the regulator maximum load current the catch diode current rating must be at least 1.2 times greater than the maximum load current. For a robust design, the diode should have a current rating equal to the maximum current limit of the LM2594 to be able to withstand a continuous output short. **B.** The reverse voltage rating of the diode should be at least 1.25 times the maximum input voltage.	**3. Catch Diode Selection (D1)** **A.** For this example, a 1.0 A current rating is adequate. **B.** For V_{in} = 12 V use a 20 V 1N5817 Schottky diode or any suggested fast recovery diode in the Table 2.

PROCEDURE (ADJUSTABLE OUTPUT VERSION: LM2594) (CONTINUED)

Procedure	Example
4. Inductor Selection (L1) **A.** Use the following formula to calculate the inductor Volt x microsecond [V x μs] constant: $E \times T = \left(V_{IN} - V_{OUT} - V_{SAT}\right) \times \frac{V_{OUT} + V_D}{V_{IN} - V_{SAT} + V_D} \times \frac{1000}{150\ \text{kHz}} (V \times \mu s)$ **B.** Match the calculated E x T value with the corresponding number on the vertical axis of the Inductor Value Selection Guide shown in Figure 19. This E x T constant is a measure of the energy handling capability of an inductor and is dependent upon the type of core, the core area, the number of turns, and the duty cycle. **C.** Next step is to identify the inductance region intersected by the E x T value and the maximum load current value on the horizontal axis shown in Figure 19. **D.** Select an appropriate inductor from Table 3. The inductor chosen must be rated for a switching frequency of 150 kHz and for a current rating of 1.15 x I_{Load}. The inductor current rating can also be determined by calculating the inductor peak current: $I_{p(max)} = I_{Load(max)} + \frac{\left(V_{in} - V_{out}\right) t_{on}}{2L}$ where t_{on} is the "on" time of the power switch and $t_{on} = \frac{V_{out}}{V_{in}} \times \frac{1.0}{f_{osc}}$	**4. Inductor Selection (L1)** **A.** Calculate E x T [V x μs] constant: $E \times T = (12 - 5 - 1.0) \times \frac{5 + 0.5}{12 - 1 + 0.5} \times \frac{1000}{150\ \text{kHz}} (V \times \mu s)$ $E \times T = (6) \times \frac{5.5}{11.5} \times 6.7 (V \times \mu s)$ **B.** E x T = 19.2 [V x μs] **C.** $I_{Load(max)}$ = 0.5 A Inductance Region = L20 **D.** Proper inductor value = 100 μH Choose the inductor from Table 3.
5. Output Capacitor Selection (C_{out}) **A.** Since the LM2594 is a forward−mode switching regulator with voltage mode control, its open loop has 2−pole−1−zero frequency characteristic. The loop stability is determined by the output capacitor (capacitance, ESR) and inductance values. For stable operation use recommended values of the output capacitors in Table 1. Low ESR electrolytic capacitors between 180 μF and 1000 μF provide best results. **B.** The capacitors voltage rating should be at least 1.5 times greater than the output voltage, and often much higher voltage rating is needed to satisfy low ESR requirement	**5. Output Capacitor Selection (C_{out})** **A.** In this example is recommended Nichicon PM capacitors: 220 μF/25 V
6. Feedforward Capacitor (C_{FF}) It provides additional stability mainly for higher input voltages. For Cff selection use Table 1. The compensation capacitor between 0.6 nF and 15 nF is wired in parallel with the output voltage setting resistor R2, The capacitor type can be ceramic, plastic, etc..	**6. Feedforward Capacitor (C_{FF})** In this example is recommended feedforward capacitor 1.5 nF.

LM2594 Series Buck Regulator Design Procedures (continued)

Table 1. RECOMMENDED VALUES OF THE OUTPUT CAPACITOR AND FEEDFORWARD CAPACITOR
(I_{load} = 0.5 A)

Nichicon Pm Capacitors									
V_{in} (V)	**Capacity/Voltage Range / ESR[μF/V/mΩ]**								
40	1000/10/60	680/250	470/10/140	470/10/140	330/10/160	220/25/110	220/110	180/25/140	180/35/100
35	1000/10/60	680/150	470/10/140	330/10/160	180/25/140	180/25/140	180/25/140	180/25/140	180/35/100
26	1000/10/60	470/10/140	330/10/160	220/25/110	180/25/140	180/25/140	100/25/240	180/25/140	
20	1000/10/60	470/10/140	220/25/110	220/25/110	100/25/240	100/25/240	100/25/240		
18	1000/10/60	470/10/140	220/25/110	220/25/110	100/25/240	100/25/240	100/25/240		
12	470/10/140	470/10/140	220/25/110	180/25/140	100/25/240				
10	470/10/140	470/10/140	220/25/110	180/25/140					
V_{out} (V)	2	3	4	6	9	12	15	24	28
C_{FF} (nF)	15	4.7	1.5	1.5	1.5	1.5	1	0.6	0.6

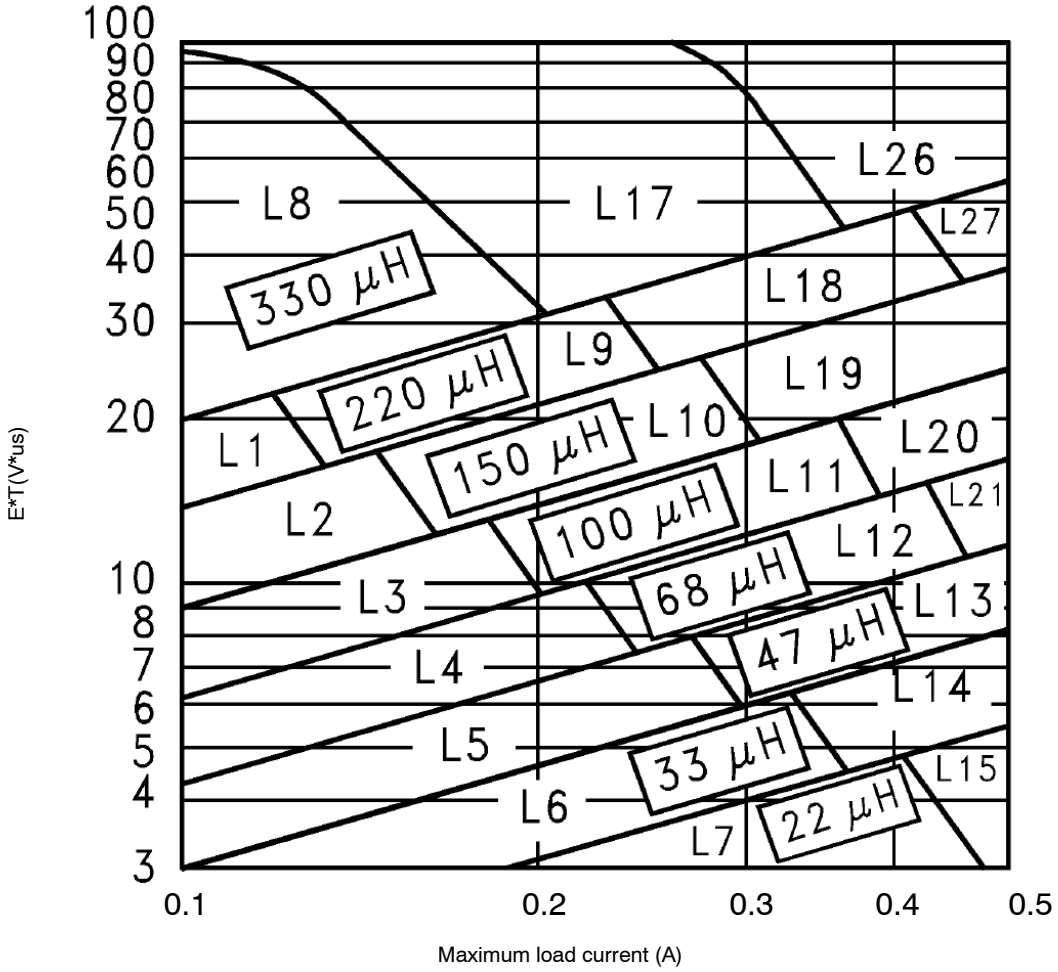

Figure 19. Inductor Value Selection Guides (For Continuous Mode Operation)

Table 2. DIODE SELECTION

	1A Diodes			
	Surface Mouns		Through Hole	
V_R	Schottky	Ultra Fast Recovery	Schottky	Ultra Fast Recovery
20 V	MBRS140	All of these diodes are rated to at least 60 V. MURS120 10BF10	1N5817	All of these diodes are rated to at least 60 V. MUR120 HER101 11DF1
30 V	10BQ040		SR102	
40 V	10MQ040		1N5818	
50 V or more	MBRS160		SR103	
	10BQ050		11DQ03	
	10MQ060		1N5819	
	MBRS1100		SR104	
	10MQ090		11DQ04	
	SGL41-60		SR105	
	SS16		MBR150	
	MBRS140		11DQ05	
	10BQ040		MBR160	

Table 3. INDUCTOR MANUFACTURERS PART NUMBERS

			Schott		Renco		Pulse Engineering		Coilcraft
	Inductance (μH)	Current (A)	Through Hole	Surface Mount	Through Hole	Surface Mount	Through Hole	Surface Mount	Surface Mount
L1	220	0.18	67143910	67144280	RL−5470−3	PE−53801	PE−53801−S	–	DO1608−224
L2	150	0.21	67143920	67144290	RL−5470−4	PE−53802	PE−53802−S	–	DO1608−154
L3	100	0.26	67143930	67144300	RL−5470−5	PE−53803	PE−53803−S	–	DO1608−104
L4	68	0.32	67143940	67144310	RL−1284−68	PE−53804	PE−53804−S	–	DO1608−68
L5	47	0.37	67148310	67148420	RL−1284−47	PE−53805	PE−53805−S	–	DO1608−473
L6	33	0.44	67148320	67148430	RL−1284−33	PE−53806	PE−53806−S	–	DO1608−333
L7	22	0.60	67148330	67148440	RL−1284−22	PE−53807	PE−53807−S	–	DO1608−223
L8	330	0.26	67143950	67144320	RL−5470−2	PE−53808	PE−53808−S	–	DO3308−334
L9	220	0.32	67143960	67144330	RL−5470−3	PE−53809	PE−53809−S	–	DO3308−224
L10	150	0.39	67143970	67144340	RL−5470−4	PE−53810	PE−53810−S	–	DO3308−154
L11	100	0.48	67143980	67144350	RL−5470−5	PE−53811	PE−53811−S	–	DO3308−104
L12	68	0.58	67143990	67144360	RL−5470−6	PE−53812	PE−53812−S	–	DO1608−683
L13	47	0.70	67144000	67144380	RL−5470−7	PE−53813	PE−53813−S	–	DO3308−473
L14	33	0.83	67148340	67148450	RL−1284−33	PE−53814	PE−53814−S	–	DO1608−333
L15	22	0.99	67148350	67148460	RL−1284−22	PE−53815	PE−53815−S	–	DO1608−223
L16	15	1.24	67148360	67148470	RL−1284−15	PE−53816	PE−53816−S	–	DO1608−153
L17	330	0.42	67144030	67144410	RL−5471−1	PE−53817	PE−53817−S	–	DO3316−334
L18	220	0.55	67144040	67144420	RL−5471−2	PE−53818	PE−53818−S	–	DO3316−224
L19	150	0.66	67144050	67144430	RL−5471−3	PE−53819	PE−53819−S	RFB0810−151L	DO3316−154
L20	100	0.82	67144060	67144440	RL−5471−4	PE−53820	PE−53820−S	RFB0810−101L	DO3340P−104
L21	68	0.99	67144070	67144450	RL−5471−5	PE−53821	PE−53821−S	RFB0810−680L	DDO3316−683
L26	330	0.80	67144100	67144480	RL−5471−1	PE−53826	PE−53826−S	–	–
L27	220	1.00	67144110	67144490	RL−5471−2	PE−53827	PE−53827−S	–	–

APPLICATION INFORMATION

EXTERNAL COMPONENTS

Input Capacitor (C_{in})

The Input Capacitor Should Have a Low ESR

For stable operation of the switch mode converter a low ESR (Equivalent Series Resistance) aluminium or solid tantalum bypass capacitor is needed between the input pin and the ground pin, to prevent large voltage transients from appearing at the input. It must be located near the regulator and use short leads. With most electrolytic capacitors, the capacitance value decreases and the ESR increases with lower temperatures. For reliable operation in temperatures below −25°C larger values of the input capacitor may be needed. Also paralleling a ceramic or solid tantalum capacitor will increase the regulator stability at cold temperatures.

RMS Current Rating of C_{in}

The important parameter of the input capacitor is the RMS current rating. Capacitors that are physically large and have large surface area will typically have higher RMS current ratings. For a given capacitor value, a higher voltage electrolytic capacitor will be physically larger than a lower voltage capacitor, and thus be able to dissipate more heat to the surrounding air, and therefore will have a higher RMS current rating. The consequence of operating an electrolytic capacitor beyond the RMS current rating is a shortened operating life. In order to assure maximum capacitor operating lifetime, the capacitor's RMS ripple current rating should be:

$$I_{rms} > 1.2 \times d \times I_{Load}$$

where d is the duty cycle, for a buck regulator

$$d = \frac{t_{on}}{T} = \frac{V_{out}}{V_{in}}$$

and $d = \frac{t_{on}}{T} = \frac{|V_{out}|}{|V_{out}| + V_{in}}$ for a buck–boost regulator.

Output Capacitor (C_{out})

For low output ripple voltage and good stability, low ESR output capacitors are recommended. An output capacitor has two main functions: it filters the output and provides regulator loop stability. The ESR of the output capacitor and the peak−to−peak value of the inductor ripple current are the main factors contributing to the output ripple voltage value. Standard aluminium electrolytics could be adequate for some applications but for quality design, low ESR types are recommended.

An aluminium electrolytic capacitor's ESR value is related to many factors such as the capacitance value, the voltage rating, the physical size and the type of construction. In most cases, the higher voltage electrolytic capacitors have lower ESR value. Often capacitors with much higher voltage ratings may be needed to provide low ESR values that, are required for low output ripple voltage.

Feedfoward Capacitor

(Adjustable Output Voltage Version)

This capacitor adds lead compensation to the feedback loop and increases the phase margin for better loop stability. For C_{FF} selection, see the design procedure section.

The Output Capacitor Requires an ESR Value That Has an Upper and Lower Limit

As mentioned above, a low ESR value is needed for low output ripple voltage, typically 1% to 2% of the output voltage. But if the selected capacitor's ESR is extremely low (below 0.05 Ω), there is a possibility of an unstable feedback loop, resulting in oscillation at the output. This situation can occur when a tantalum capacitor, that can have a very low ESR, is used as the only output capacitor.

At Low Temperatures, Put in Parallel Aluminium Electrolytic Capacitors with Tantalum Capacitors

Electrolytic capacitors are not recommended for temperatures below −25°C. The ESR rises dramatically at cold temperatures and typically rises 3 times at −25°C and as much as 10 times at −40°C. Solid tantalum capacitors have much better ESR spec at cold temperatures and are recommended for temperatures below −25°C. They can be also used in parallel with aluminium electrolytics. The value of the tantalum capacitor should be about 10% or 20% of the total capacitance. The output capacitor should have at least 50% higher RMS ripple current rating at 150 kHz than the peak−to−peak inductor ripple current.

Catch Diode

Locate the Catch Diode Close to the LM2594

The LM2594 is a step−down buck converter; it requires a fast diode to provide a return path for the inductor current when the switch turns off. This diode must be located close to the LM2594 using short leads and short printed circuit traces to avoid EMI problems.

Use a Schottky or a Soft Switching Ultra−Fast Recovery Diode

Since the rectifier diodes are very significant sources of losses within switching power supplies, choosing the rectifier that best fits into the converter design is an important process. Schottky diodes provide the best performance because of their fast switching speed and low forward voltage drop.

They provide the best efficiency especially in low output voltage applications (5.0 V and lower). Another choice could be Fast−Recovery, or Ultra−Fast Recovery diodes. It has to be noted, that some types of these diodes with an abrupt turnoff characteristic may cause instability or EMI troubles.

A fast−recovery diode with soft recovery characteristics can better fulfill some quality, low noise design requirements. Table 2 provides a list of suitable diodes for the LM2594 regulator. Standard 50/60 Hz rectifier diodes, such as the 1N4001 series or 1N5400 series are **NOT** suitable.

Inductor

The magnetic components are the cornerstone of all switching power supply designs. The style of the core and the winding technique used in the magnetic component's design has a great influence on the reliability of the overall power supply.

Using an improper or poorly designed inductor can cause high voltage spikes generated by the rate of transitions in current within the switching power supply, and the possibility of core saturation can arise during an abnormal operational mode. Voltage spikes can cause the semiconductors to enter avalanche breakdown and the part can instantly fail if enough energy is applied. It can also cause significant RFI (Radio Frequency Interference) and EMI (Electro−Magnetic Interference) problems.

Continuous and Discontinuous Mode of Operation

The LM2594 step−down converter can operate in both the continuous and the discontinuous modes of operation. The regulator works in the continuous mode when loads are relatively heavy, the current flows through the inductor continuously and never falls to zero. Under light load conditions, the circuit will be forced to the discontinuous mode when inductor current falls to zero for certain period of time (see Figure 20 and Figure 21). Each mode has distinctively different operating characteristics, which can affect the regulator performance and requirements. In many cases the preferred mode of operation is the continuous mode. It offers greater output power, lower peak currents in the switch, inductor and diode, and can have a lower output ripple voltage. On the other hand it does require larger inductor values to keep the inductor current flowing continuously, especially at low output load currents and/or high input voltages.

To simplify the inductor selection process, an inductor selection guide for the LM2594 regulator was added to this data sheet (Figure 19). This guide assumes that the regulator is operating in the continuous mode, and selects an inductor that will allow a peak−to−peak inductor ripple current to be a certain percentage of the maximum design load current. This percentage is allowed to change as different design load currents are selected. For light loads (less than approximately 300 mA) it may be desirable to operate the regulator in the discontinuous mode, because the inductor value and size can be kept relatively low. Consequently, the percentage of inductor peak−to−peak current increases. This discontinuous mode of operation is perfectly acceptable for this type of switching converter. Any buck regulator will be forced to enter discontinuous mode if the load current is light enough.

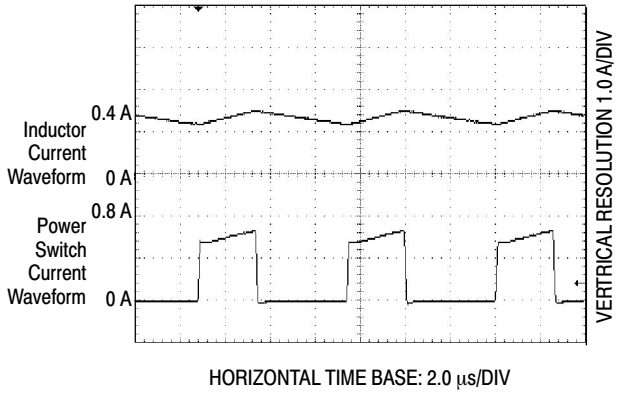

Figure 20. Continuous Mode Switching Current Waveforms

Selecting the Right Inductor Style

Some important considerations when selecting a core type are core material, cost, the output power of the power supply, the physical volume the inductor must fit within, and the amount of EMI (Electro−Magnetic Interference) shielding that the core must provide. The inductor selection guide covers different styles of inductors, such as pot core, E−core, toroid and bobbin core, as well as different core materials such as ferrites and powdered iron from different manufacturers.

For high quality design regulators the toroid core seems to be the best choice. Since the magnetic flux is contained within the core, it generates less EMI, reducing noise problems in sensitive circuits. The least expensive is the bobbin core type, which consists of wire wound on a ferrite rod core. This type of inductor generates more EMI due to the fact that its core is open, and the magnetic flux is not contained within the core.

When multiple switching regulators are located on the same printed circuit board, open core magnetics can cause

interference between two or more of the regulator circuits, especially at high currents due to mutual coupling. A toroid, pot core or E−core (closed magnetic structure) should be used in such applications.

Do Not Operate an Inductor Beyond its Maximum Rated Current

Exceeding an inductor's maximum current rating may cause the inductor to overheat because of the copper wire losses, or the core may saturate. Core saturation occurs when the flux density is too high and consequently the cross sectional area of the core can no longer support additional lines of magnetic flux.

This causes the permeability of the core to drop, the inductance value decreases rapidly and the inductor begins to look mainly resistive. It has only the DC resistance of the winding. This can cause the switch current to rise very rapidly and force the LM2594 internal switch into cycle−by−cycle current limit, thus reducing the DC output load current. This can also result in overheating of the inductor and/or the LM2594. Different inductor types have different saturation characteristics, and this should be kept in mind when selecting an inductor.

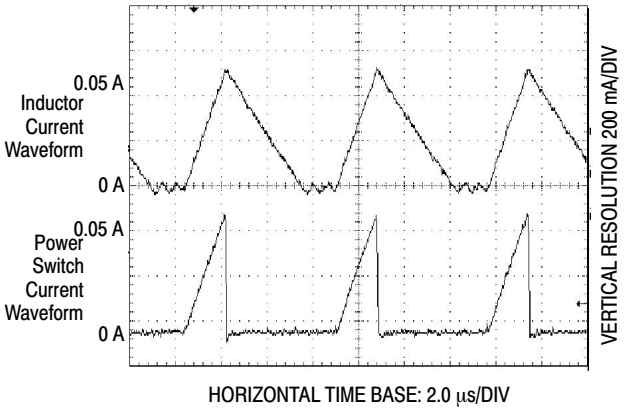

Figure 21. Discontinuous Mode Switching Current Waveforms

GENERAL RECOMMENDATIONS

Output Voltage Ripple and Transients

Source of the Output Ripple

Since the LM2594 is a switch mode power supply regulator, its output voltage, if left unfiltered, will contain a sawtooth ripple voltage at the switching frequency. The output ripple voltage value ranges from 0.5% to 3% of the output voltage. It is caused mainly by the inductor sawtooth ripple current multiplied by the ESR of the output capacitor.

Short Voltage Spikes and How to Reduce Them

The regulator output voltage may also contain short voltage spikes at the peaks of the sawtooth waveform (see Figure 22). These voltage spikes are present because of the fast switching action of the output switch, and the parasitic inductance of the output filter capacitor. There are some other important factors such as wiring inductance, stray capacitance, as well as the scope probe used to evaluate these transients, all these contribute to the amplitude of these spikes. To minimize these voltage spikes, low inductance capacitors should be used, and their lead lengths must be kept short. The importance of quality printed circuit board layout design should also be highlighted.

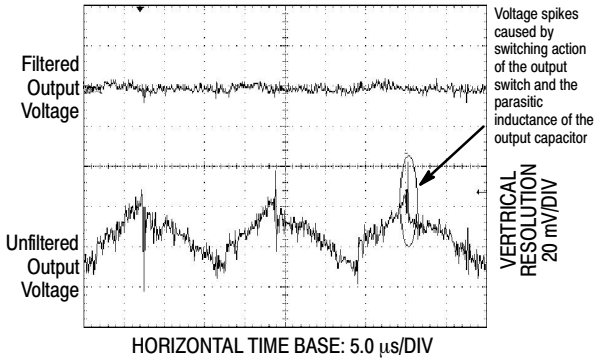

Figure 22. Output Ripple Voltage Waveforms

Minimizing the Output Ripple

In order to minimize the output ripple voltage it is possible to enlarge the inductance value of the inductor L1 and/or to use a larger value output capacitor. There is also another way to smooth the output by means of an additional LC filter (3 μH, 100 μF), that can be added to the output (see Figure 31) to further reduce the amount of output ripple and transients. With such a filter it is possible to reduce the output ripple voltage transients 10 times or more. Figure 22 shows the difference between filtered and unfiltered output waveforms of the regulator shown in Figure 31.

The lower waveform is from the normal unfiltered output of the converter, while the upper waveform shows the output ripple voltage filtered by an additional LC filter.

Heatsinking and Thermal Considerations

The LM2574 is available in both 8−pin DIP and SOIC−8 packages. When used in the typical application the copper lead frame conducts the majority of the heat from the die, through the leads, to the printed circuit copper. The copper and the board are the heatsink for this package and the other heat producing components, such as the catch diode and inductor. For the best thermal performance, wide copper traces should be used and all ground and unused pins should be soldered to generous amounts of printed circuit board copper, such as a ground plane. Large areas of copper provide the best transfer of heat to the surrounding air. One exception to this is the output (switch) pin, which should not have large areas of copper in order to minimize coupling to sensitive circuitry.

Additional improvement in heat dissipation can be achieved even by using of double sided or multilayer boards which can provide even better heat path to the ambient. Using a socket for the 8−pin DIP package is not recommended because socket represents an additional thermal resistance, and as a result the junction temperature will be higher.

Since the current rating of the LM2594 is only 0.5 A, the total package power dissipation for this switcher is quite low, ranging from approximately 0.1 W up to 0.75 W under varying conditions. In a carefully engineered printed circuit board, the through−hole DIP package can easily dissipate up to 0.75 W, even at ambient temperatures of 60°C, and still keep the maximum junction temperature below 125°C.

Thermal Analysis and Design

The following procedure must be performed to determine the operating junction temperature. First determine:

1. $P_{D(max)}$ maximum regulator power dissipation in the application.
2. $T_{A(max)}$ maximum ambient temperature in the application.
3. $T_{J(max)}$ maximum allowed junction temperature (125°C for the LM2594). For a conservative design, the maximum junction temperature should not exceed 110°C to assure safe operation. For every additional +10°C temperature rise that the junction must withstand, the estimated operating lifetime of the component is halved.
4. $R_{\theta JC}$ package thermal resistance junction−case.
5. $R_{\theta JA}$ package thermal resistance junction−ambient.

(Refer to Maximum Ratings on page 3 of this data sheet or $R_{\theta JC}$ and $R_{\theta JA}$ values).

The following formula is to calculate the approximate total power dissipated by the LM2594:

$$P_D = (V_{in} \times I_Q) + d \times I_{Load} \times V_{sat}$$

where d is the duty cycle and for buck converter

$$d = \frac{t_{on}}{T} = \frac{V_O}{V_{in}},$$

I_Q (quiescent current) and V_{sat} can be found in the LM2594 data sheet,
V_{in} is minimum input voltage applied,
V_O is the regulator output voltage,
I_{Load} is the load current.

The dynamic switching losses during turn−on and turn−off can be neglected if proper type catch diode is used.

The junction temperature can be determined by the following expression:

$$T_J = (R_{\theta JA})\ (P_D) + T_A$$

where $(R_{\theta JA})(P_D)$ represents the junction temperature rise caused by the dissipated power and T_A is the maximum ambient temperature.

Some Aspects That can Influence Thermal Design

It should be noted that the package thermal resistance and the junction temperature rise numbers are all approximate, and there are many factors that will affect these numbers, such as PC board size, shape, thickness, physical position, location, board temperature, as well as whether the surrounding air is moving or still.

Other factors are trace width, total printed circuit copper area, copper thickness, single− or double−sided, multilayer board, the amount of solder on the board or even color of the traces.

The size, quantity and spacing of other components on the board can also influence its effectiveness to dissipate the heat.

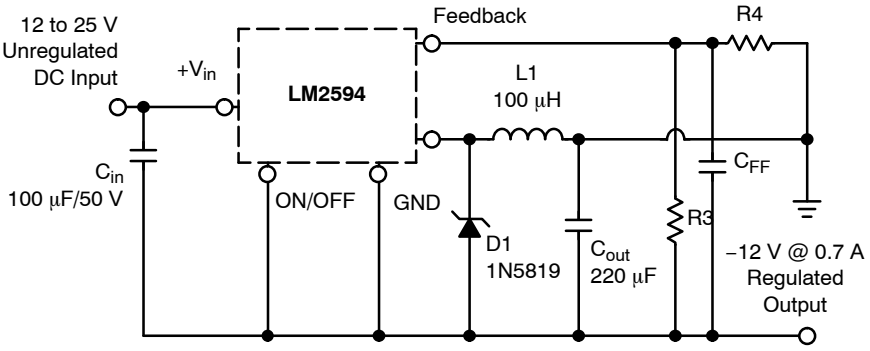

Figure 23. Inverting Buck−Boost Develops −12 V

ADDITIONAL APPLICATIONS

Inverting Regulator

An inverting buck−boost regulator using the LM2594−ADJ is shown in Figure 23. This circuit converts a positive input voltage to a negative output voltage with a common ground by bootstrapping the regulators ground to the negative output voltage. By grounding the feedback pin, the regulator senses the inverted output voltage and regulates it.

In this example the LM2594 is used to generate a −12 V output. The maximum input voltage in this case cannot exceed +28 V because the maximum voltage appearing

across the regulator is the absolute sum of the input and output voltages and this must be limited to a maximum of 40 V.

This circuit configuration is able to deliver approximately 0.25 A to the output when the input voltage is 12 V or higher. At lighter loads the minimum input voltage required drops to approximately 4.7 V, because the buck−boost regulator topology can produce an output voltage that, in its absolute value, is either greater or less than the input voltage.

Since the switch currents in this buck−boost configuration are higher than in the standard buck converter topology, the available output current is lower.

This type of buck−boost inverting regulator can also require a larger amount of startup input current, even for light loads. This may overload an input power source with a current limit less than 1.0 A.

Such an amount of input startup current is needed for at least 2.0 ms or more. The actual time depends on the output voltage and size of the output capacitor.

Because of the relatively high startup currents required by this inverting regulator topology, the use of a delayed startup or an undervoltage lockout circuit is recommended.

Using a delayed startup arrangement, the input capacitor can charge up to a higher voltage before the switch−mode regulator begins to operate.

The high input current needed for startup is now partially supplied by the input capacitor C_{in}.

It has been already mentioned above, that in some situations, the delayed startup or the undervoltage lockout features could be very useful. A delayed startup circuit applied to a buck−boost converter is shown in Figure 28. Figure 30 in the “Undervoltage Lockout” section describes an undervoltage lockout feature for the same converter topology.

Design Recommendations:

The inverting regulator operates in a different manner than the buck converter and so a different design procedure has to be used to select the inductor L1 or the output capacitor C_{out}.

The output capacitor values must be larger than what is normally required for buck converter designs. Low input voltages or high output currents require a large value output capacitor (in the range of thousands of μF).

The recommended range of inductor values for the inverting converter design is between 68 μH and 220 μH. To select an inductor with an appropriate current rating, the inductor peak current has to be calculated.

The following formula is used to obtain the peak inductor current:

$$I_{peak} \approx \frac{I_{Load}\,(V_{in} + |V_O|)}{V_{in}} + \frac{V_{in} \times t_{on}}{2L_1}$$

$$\text{where } t_{on} = \frac{|V_O|}{V_{in} + |V_O|} \times \frac{1.0}{f_{osc}}, \text{ and } f_{osc} = 52\text{ kHz.}$$

Under normal continuous inductor current operating conditions, the worst case occurs when V_{in} is minimal.

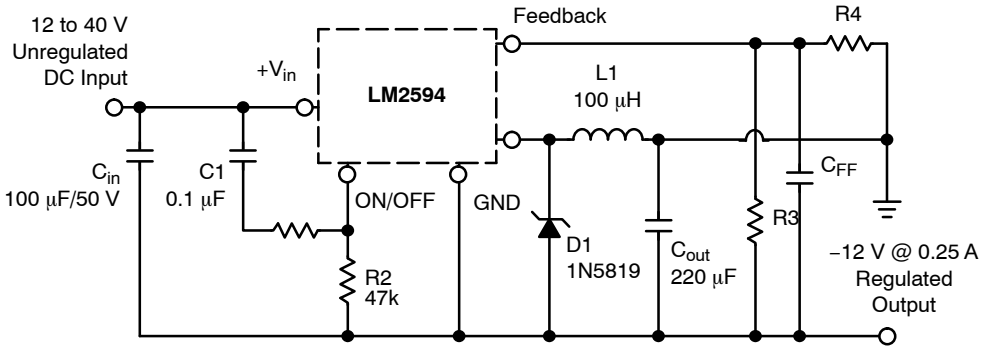

Figure 24. Inverting Buck−Boost Develops with Delayed Startup

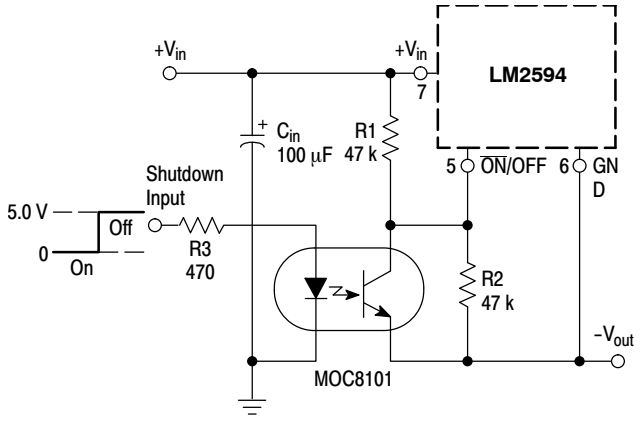

NOTE: This picture does not show the complete circuit.

Figure 25. Inverting Buck−Boost Regulator Shutdown Circuit Using an Optocoupler

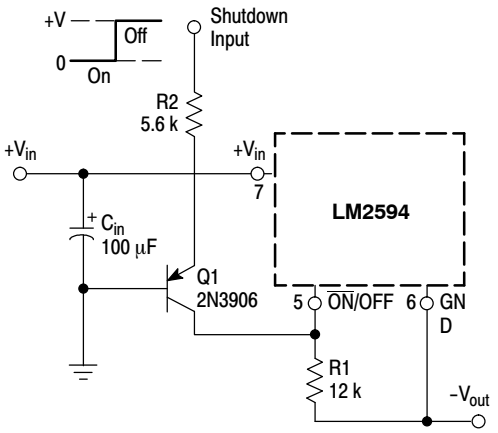

NOTE: This picture does not show the complete circuit.

Figure 26. Inverting Buck−Boost Regulator Shutdown Circuit Using a PNP Transistor

With the inverting configuration, the use of the $\overline{ON}$/OFF pin requires some level shifting techniques. This is caused by the fact, that the ground pin of the converter IC is no longer at ground. Now, the $\overline{ON}$/OFF pin threshold voltage (1.3 V approximately) has to be related to the negative output voltage level. There are many different possible shut down methods, two of them are shown in Figures 25 and 26.

Negative Boost Regulator

This example is a variation of the buck−boost topology and it is called negative boost regulator. This regulator experiences relatively high switch current, especially at low input voltages. The internal switch current limiting results in lower output load current capability.

The circuit in Figure 27 shows the negative boost configuration. The input voltage in this application ranges from −5.0 V to −12 V and provides a regulated −12 V output. If the input voltage is greater than −12 V, the output will rise above −12 V accordingly, but will not damage the regulator.

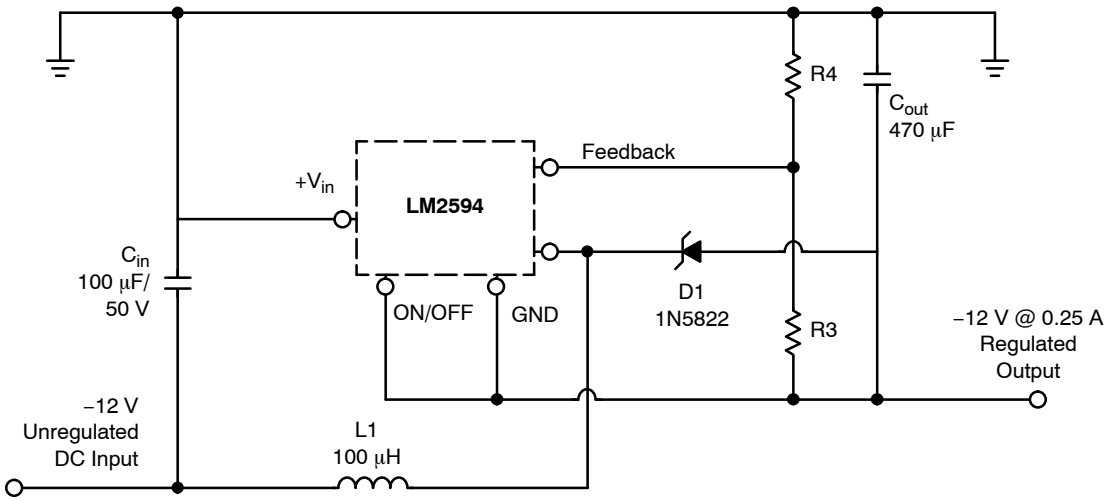

Figure 27. Negative Boost Regulator

Design Recommendations:

The same design rules as for the previous inverting buck−boost converter can be applied. The output capacitor C_{out} must be chosen larger than would be required for a what standard buck converter. Low input voltages or high output currents require a large value output capacitor (in the range of thousands of μF). The recommended range of inductor values for the negative boost regulator is the same as for inverting converter design.

Another important point is that these negative boost converters cannot provide current limiting load protection in the event of a short in the output so some other means, such as a fuse, may be necessary to provide the load protection.

Delayed Startup

There are some applications, like the inverting regulator already mentioned above, which require a higher amount of startup current. In such cases, if the input power source is limited, this delayed startup feature becomes very useful.

To provide a time delay between the time when the input voltage is applied and the time when the output voltage comes up, the circuit in Figure 28 can be used. As the input voltage is applied, the capacitor C1 charges up, and the voltage across the resistor R2 falls down. When the voltage on the $\overline{ON}$/OFF pin falls below the threshold value 1.3 V, the regulator starts up. Resistor R1 is included to limit the maximum voltage applied to the $\overline{ON}$/OFF pin. It reduces the power supply noise sensitivity, and also limits the capacitor C1 discharge current, but its use is not mandatory.

When a high 50 Hz or 60 Hz (100 Hz or 120 Hz respectively) ripple voltage exists, a long delay time can cause some problems by coupling the ripple into the $\overline{ON}$/OFF pin, the regulator could be switched periodically on and off with the line (or double) frequency.

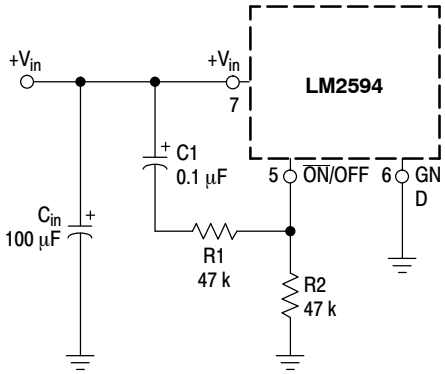

NOTE: This picture does not show the complete circuit.

Figure 28. Delayed Startup Circuitry

Undervoltage Lockout

Some applications require the regulator to remain off until the input voltage reaches a certain threshold level. Figure 29 shows an undervoltage lockout circuit applied to a buck regulator. A version of this circuit for buck−boost converter is shown in Figure 30. Resistor R3 pulls the $\overline{ON}$/OFF pin high and keeps the regulator off until the input voltage reaches a predetermined threshold level with respect to the ground Pin 3, which is determined by the following expression:

$$V_{th} \approx V_{Z1} + \left(1.0 + \frac{R2}{R1}\right) V_{BE}\ (Q1)$$

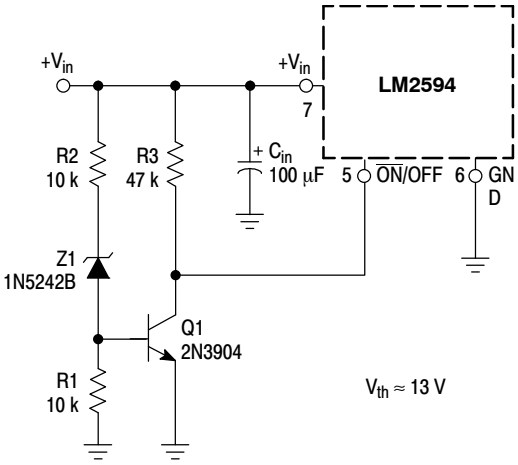

NOTE: This picture does not show the complete circuit.

Figure 29. Undervoltage Lockout Circuit for Buck Converter

The following formula is used to obtain the peak inductor current:

$$I_{peak} \approx \frac{I_{Load}\,(V_{in} + |V_O|)}{V_{in}} + \frac{V_{in} \times t_{on}}{2L_1}$$

$$\text{where } t_{on} = \frac{|V_O|}{V_{in} + |V_O|} \times \frac{1.0}{f_{osc}}, \text{ and } f_{osc} = 52\ \text{kHz}.$$

Under normal continuous inductor current operating conditions, the worst case occurs when V_{in} is minimal.

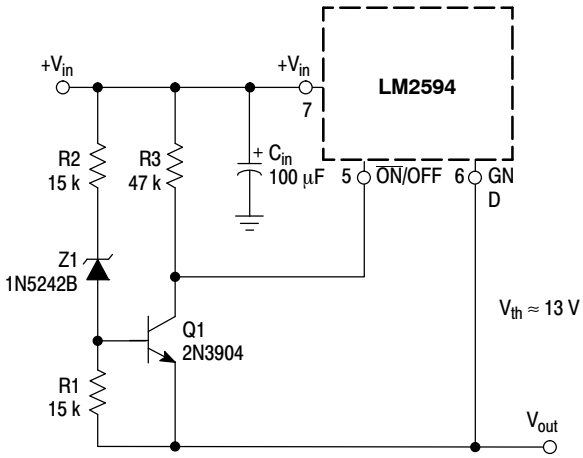

NOTE: This picture does not show the complete circuit.

Figure 30. Undervoltage Lockout Circuit for Buck−Boost Converter

Adjustable Output, Low−Ripple Power Supply

A 0.5 A output current capability power supply that features an adjustable output voltage is shown in Figure 31.

This regulator delivers 0.5 A into 1.2 V to 35 V output. The input voltage ranges from roughly 3.0 V to 40 V. In order to achieve a 10 or more times reduction of output ripple, an additional L−C filter is included in this circuit.

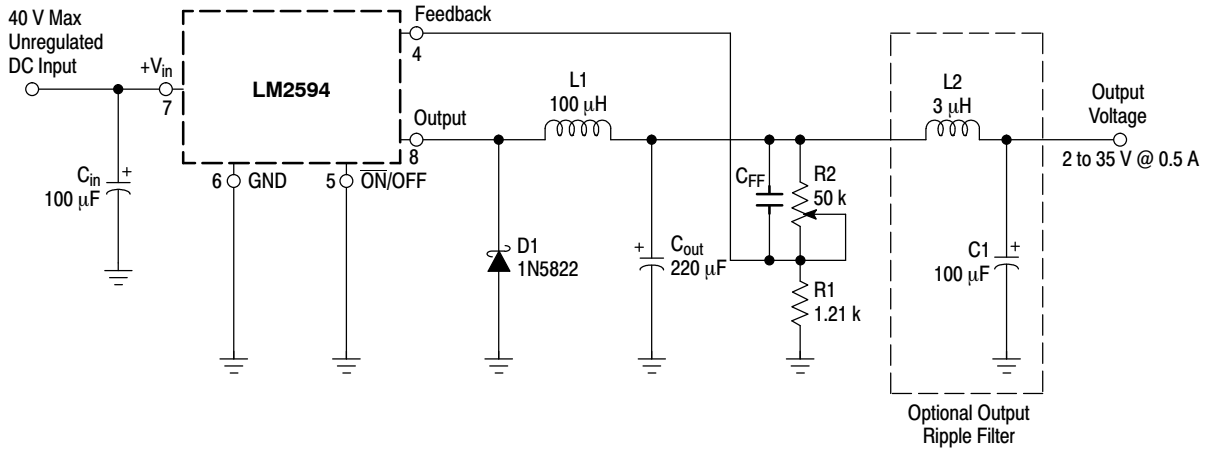

Figure 31. 2 to 35 V Adjustable 0.5 A Power Supply with Low Output Ripple

THE LM2594 STEP−DOWN VOLTAGE REGULATOR WITH 5.0 V @ 0.5 A OUTPUT POWER CAPABILITY. TYPICAL APPLICATION WITH THROUGH−HOLE PC BOARD LAYOUT

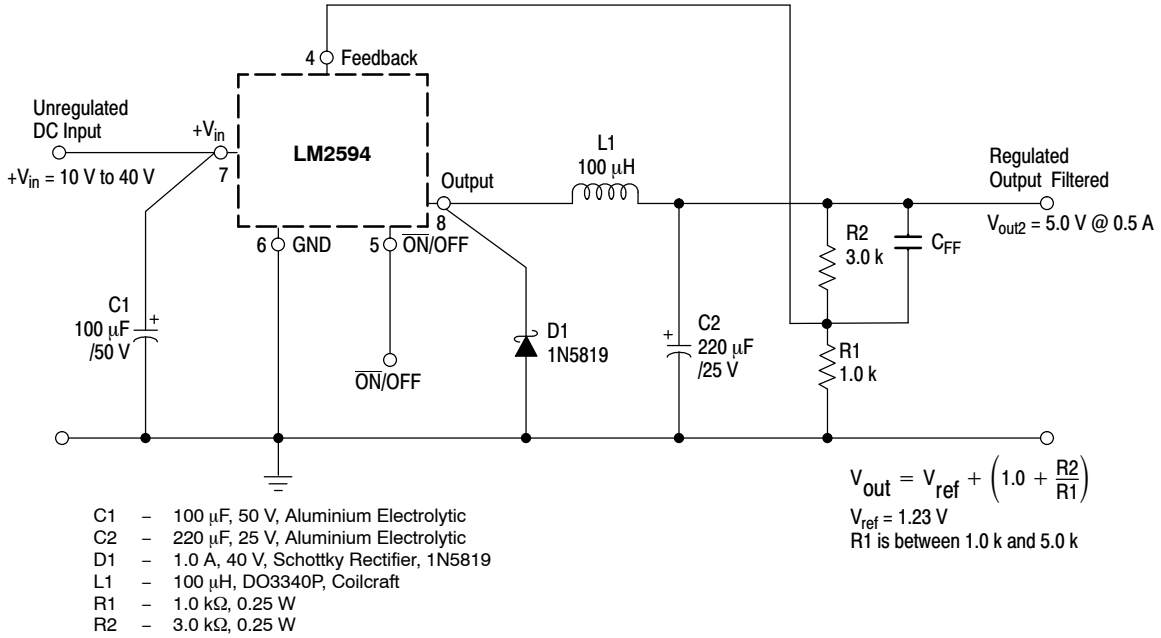

Figure 32. Schematic Diagram of the 5.0 V @ 0.5 A Step−Down Converter Using the LM2594−ADJ

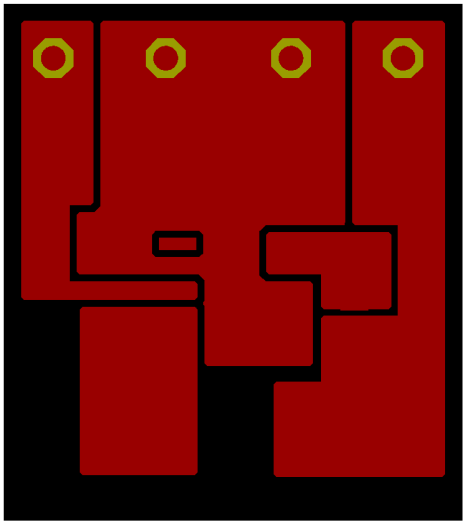

NOTE: Not to scale.

Figure 33. Printed Circuit Board Layout With Component

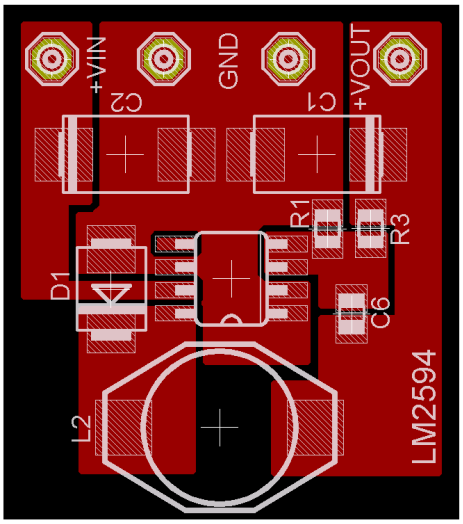

NOTE: Not to scale.

Figure 34. Printed Circuit Board Layout Copper Side

References

- National Semiconductor LM2594 Data Sheet and Application Note
- National Semiconductor LM2595 Data Sheet and Application Note
- Marty Brown “Practical Switching Power Supply Design”, Academic Press, Inc., San Diego 1990
- Ray Ridley “High Frequency Magnetics Design”, Ridley Engineering, Inc. 1995

ORDERING INFORMATION

Device	Device Marking	Package	Shipping†
LM2594DADJG	LM2594	SOIC-8 (Pb Free)	98 Units / Rail
LM2594DADJR2G	LM2594	SOIC-8 (Pb Free)	2500 / Tape & Reel
LM2594PADJG	2594-ADJ	PDIP-8 (Pb Free)	50 Units / Rail

†For information on tape and reel specifications, including part orientation and tape sizes, please refer to our Tape and Reel Packaging Specifications Brochure, BRD8011/D.

PACKAGE DIMENSIONS

SOIC−8 NB
CASE 751−07
ISSUE AJ

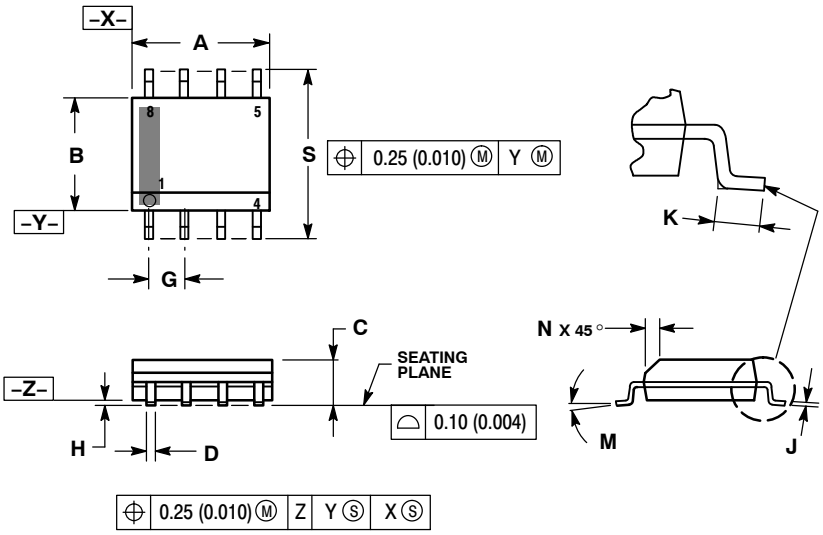

NOTES:
1. DIMENSIONING AND TOLERANCING PER ANSI Y14.5M, 1982.
2. CONTROLLING DIMENSION: MILLIMETER.
3. DIMENSION A AND B DO NOT INCLUDE MOLD PROTRUSION.
4. MAXIMUM MOLD PROTRUSION 0.15 (0.006) PER SIDE.
5. DIMENSION D DOES NOT INCLUDE DAMBAR PROTRUSION. ALLOWABLE DAMBAR PROTRUSION SHALL BE 0.127 (0.005) TOTAL IN EXCESS OF THE D DIMENSION AT MAXIMUM MATERIAL CONDITION.
6. 751−01 THRU 751−06 ARE OBSOLETE. NEW STANDARD IS 751−07.

	MILLIMETERS		INCHES	
DIM	MIN	MAX	MIN	MAX
A	4.80	5.00	0.189	0.197
B	3.80	4.00	0.150	0.157
C	1.35	1.75	0.053	0.069
D	0.33	0.51	0.013	0.020
G	1.27 BSC		0.050 BSC	
H	0.10	0.25	0.004	0.010
J	0.19	0.25	0.007	0.010
K	0.40	1.27	0.016	0.050
M	0 °	8 °	0 °	8 °
N	0.25	0.50	0.010	0.020
S	5.80	6.20	0.228	0.244

SOLDERING FOOTPRINT*

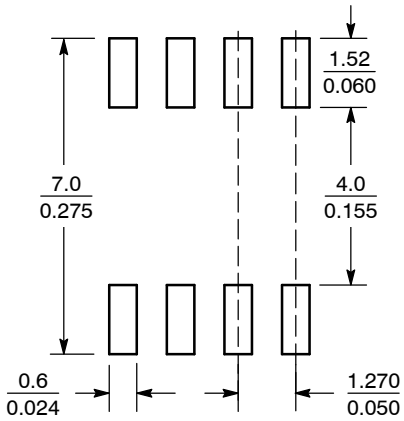

SCALE 6:1 $\left(\frac{\text{mm}}{\text{inches}}\right)$

*For additional information on our Pb−Free strategy and soldering details, please download the ON Semiconductor Soldering and Mounting Techniques Reference Manual, SOLDERRM/D.

PACKAGE DIMENSIONS

8 LEAD PDIP
CASE 626−05
ISSUE L

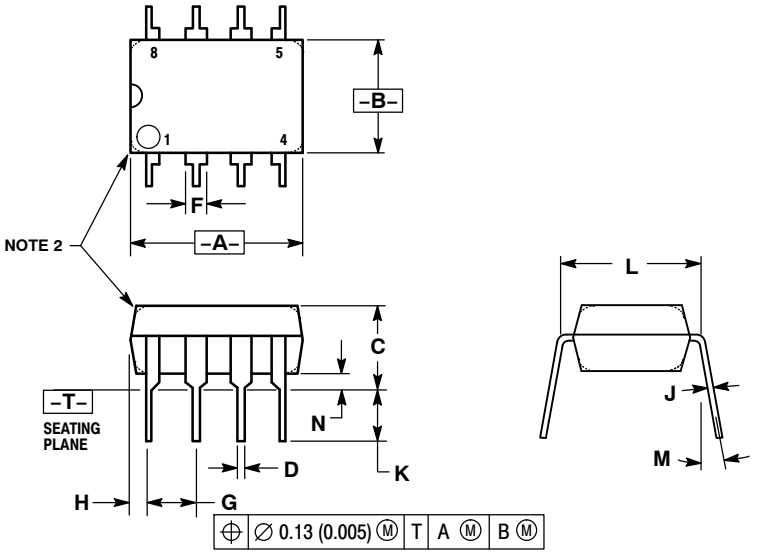

NOTES:
1. DIMENSION L TO CENTER OF LEAD WHEN FORMED PARALLEL.
2. PACKAGE CONTOUR OPTIONAL (ROUND OR SQUARE CORNERS).
3. DIMENSIONING AND TOLERANCING PER ANSI Y14.5M, 1982.

	MILLIMETERS		INCHES	
DIM	MIN	MAX	MIN	MAX
A	9.40	10.16	0.370	0.400
B	6.10	6.60	0.240	0.260
C	3.94	4.45	0.155	0.175
D	0.38	0.51	0.015	0.020
F	1.02	1.78	0.040	0.070
G	2.54 BSC		0.100 BSC	
H	0.76	1.27	0.030	0.050
J	0.20	0.30	0.008	0.012
K	2.92	3.43	0.115	0.135
L	7.62 BSC		0.300 BSC	
M	---	10°	---	10°
N	0.76	1.01	0.030	0.040

ON Semiconductor and ON are registered trademarks of Semiconductor Components Industries, LLC (SCILLC). SCILLC reserves the right to make changes without further notice to any products herein. SCILLC makes no warranty, representation or guarantee regarding the suitability of its products for any particular purpose, nor does SCILLC assume any liability arising out of the application or use of any product or circuit, and specifically disclaims any and all liability, including without limitation special, consequential or incidental damages. “Typical” parameters which may be provided in SCILLC data sheets and/or specifications can and do vary in different applications and actual performance may vary over time. All operating parameters, including “Typicals” must be validated for each customer application by customer’s technical experts. SCILLC does not convey any license under its patent rights nor the rights of others. SCILLC products are not designed, intended, or authorized for use as components in systems intended for surgical implant into the body, or other applications intended to support or sustain life, or for any other application in which the failure of the SCILLC product could create a situation where personal injury or death may occur. Should Buyer purchase or use SCILLC products for any such unintended or unauthorized application, Buyer shall indemnify and hold SCILLC and its officers, employees, subsidiaries, affiliates, and distributors harmless against all claims, costs, damages, and expenses, and reasonable attorney fees arising out of, directly or indirectly, any claim of personal injury or death associated with such unintended or unauthorized use, even if such claim alleges that SCILLC was negligent regarding the design or manufacture of the part. SCILLC is an Equal Opportunity/Affirmative Action Employer. This literature is subject to all applicable copyright laws and is not for resale in any manner.

PUBLICATION ORDERING INFORMATION

LITERATURE FULFILLMENT:
Literature Distribution Center for ON Semiconductor
P.O. Box 5163, Denver, Colorado 80217 USA
Phone: 303−675−2175 or 800−344−3860 Toll Free USA/Canada
Fax: 303−675−2176 or 800−344−3867 Toll Free USA/Canada
Email: orderlit@onsemi.com

N. American Technical Support: 800−282−9855 Toll Free USA/Canada
Europe, Middle East and Africa Technical Support:
Phone: 421 33 790 2910
Japan Customer Focus Center
Phone: 81−3−5773−3850

ON Semiconductor Website: **www.onsemi.com**

Order Literature: http://www.onsemi.com/orderlit

For additional information, please contact your local Sales Representative